ALTO-SHAAM

# Cook, Hold, Smoke Oven

# Deluxe Control

ecosmart®

## Model:

**300-TH-III**
**500-TH-III**
**750-TH-III**
**1000-TH-III**
**1200-TH-III**
**767-SK-III**
**1767-SK-III**
**1000-SK-III**
**1200-SK-III**

- **Installation**
- **Operation**
- **Maintenance**

W164 N9221 Water Street • P.O. Box 450
Menomonee Falls, Wisconsin 53052-0450 U.S.A.

PHONE: 262.251.3800 • 800.558.8744 U.S.A. / CANADA
FAX: 262.251.7067 • 800.329.8744 U.S.A. ONLY
www.alto-shaam.com

Consult instructions for operation and use.

24•7 Your Service Hotline 1-800-558-8744

HALO HEAT®

Printed in U.S.A.

MN-29758 (REV. 10) • 12/17

Warranty and Service Information . . . . . .3
Delivery . . . . . .4
Transportation and Damage Claims. . . . . .5
Unpacking . . . . . .6
Safety Procedures and Precautions. . . . . .7

**Installation**
Installation Requirements . . . . . .9
Clearance Requirements. . . . . .9
Dimension Drawings, weights & capacities . . . . . .10
Options and Accessories . . . . . .15
Stacking Configurations . . . . . .17
Leveling. . . . . .18
Restraint Requirements - Mobile Equipment . . . . . .18
Drip Tray Installation . . . . . .19
Electrical Specifications . . . . . .20

**Operating Instructions**
Start-up Operation . . . . . .22
Audible Signals . . . . . .22
Control Features . . . . . .23
Cook/Hold/Smoke Instructions. . . . . .24
Operating Features & Functions . . . . . .25
Smoking Instructions . . . . . .27
User Options. . . . . .28
HACCP . . . . . .29
General Holding Guidelines . . . . . .30

**Care and Cleaning**
Care and Cleaning Instructions. . . . . .31
Preventative Maintenance Checklist. . . . . .33

**Sanitation**
Food Safety. . . . . .34
Internal Food Product Temperatures . . . . . .34

**Service**
Trouble Shooting - Error Codes . . . . . .35
Trouble Shooting Electrical Components . . . . . .36
Exterior Service View & Parts . . . . . .37
Electronic Components View & Parts . . . . . .47
Cable Heating Kits . . . . . .51
HACCP Data Logger Service Parts (option) . . . . . .51

**Wire Diagrams**
Always refer to the wire diagram(s) included with the unit for most current version.

**Warranty**
Limited Warranty. . . . . Back Cover

PROTECT YOUR ORIGINAL MANUFACTURER'S WARRANTY, REGISTER ONLINE:

**www.alto-shaam.com** ***Support > Warranty Registration***

***Register to ensure prompt resolution of warranty claims***

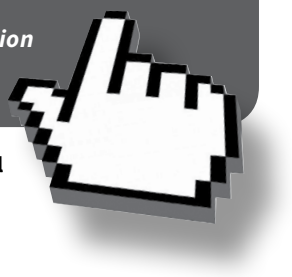

Please register your Alto-Shaam equipment to ensure prompt service in the event of a warranty claim. **You'll automatically be entered into a monthly drawing to win an additional year extended warranty!**

Registering your equipment will allow you to receive notifications about software updates and additional product information.

**NOTE: Your personal information will not be shared with any other company.**

## ALTO-SHAAM 24/7 EMERGENCY REPAIR SERVICE

Call 800-558-8744 to reach our twenty-four hour emergency service call center for immediate access to local authorized service agencies outside standard business hours. The emergency service access is provided exclusively for Alto-Shaam equipment and is available throughout the United States through Alto-Shaam's toll free number. Emergency service access is available seven days a week, including holidays.

# Delivery

This Alto-Shaam appliance has been thoroughly tested and inspected to ensure only the highest quality appliance is provided. Upon receipt, check for any possible shipping damage and report it at once to the delivering carrier. See Transportation Damage and Claims section located in this manual.

This appliance, including unattached items and accessories, may be delivered in one or more packages. Ensure all standard items and options have been received with each appliance as ordered. Save all the information packed with the appliance. Register the appliance online at *www.alto-shaam.com/en/support/warranty-registration* to ensure prompt service in the event of a warranty parts and labor claim.

This manual must be read and understood by all people using or installing the appliance. Contact the Alto-Shaam Tech Team Service Department if you have any questions concerning installation, operation, or maintenance.

1-800-558-8744; servicedept@alto-shaam.com

**The serial number is required for all inquiries.**

Always include both model and serial number(s) in any correspondence regarding the appliance.

**Model:** _____

**Serial number:** _____

**Purchased from:** _____

**Date installed:** _____ **Voltage:** _____

**⚠CAUTION**

Appliance and accessories may be heavy. To prevent serious injury, **always** use a sufficient number of trained and experienced workers when moving or leveling appliance and handling accessories.

## Environmental Conditions

Operational Environmental Conditions

- Before use, appliance must acclimate to room temperature in the environment it is placed — 24 hours is recommended.
- Ambient temperature range of 60°F to 110°F (16°C to 43°C).
- Relative humidity of less than 95% non-condensation.
- Atmospheric pressure range of 50kPa to 106kPa.

# Transportation and Damage Claims

All Alto-Shaam equipment is sold Free on Board (F.O.B.) shipping point, and when accepted by the carrier, such shipments become the property of the consignee.

Should damage occur in shipment, do not put the appliance into service until the damage has been inspected by an authorized Alto-Shaam service provider.

Shipping damages are a matter between the carrier and the consignee. In such cases, the carrier is assumed to be responsible for the safe delivery of the merchandise, unless negligence can be established on the part of the shipper.

1. Make an immediate inspection while the appliance is still in the truck or immediately after it is moved to the receiving area. Do not wait until after the appliance is moved to a storage area.
2. Do not sign a delivery receipt or a freight bill until a proper count has been made and inspection of all appliances are received.
3. Note all damage to packages directly on the carrier's delivery receipt.
4. Make certain the driver signs the delivery receipt. If the driver refuses to sign, make a notation of this refusal on the receipt.
5. If the driver refuses to allow inspection, write the following on the delivery receipt: **Driver refuses to allow inspection of containers for visible damage.**
6. Contact the carrier's office immediately upon finding damage, and request an inspection. Mail a written confirmation to the carrier's office with the time, date, and the person called.
7. Save any packages and packing material for further inspection by the carrier.
8. Promptly file a written claim with the carrier and attach copies of all supporting paperwork.

Alto-Shaam will continue our policy of assisting our customers in collecting claims which have been properly filed and actively pursued. Alto-Shaam cannot, however, file any damage claims, assume the responsibility of any claims, or accept deductions in payment for such claims.

Record the model and serial number of the appliance for easy reference. Always refer to both model and serial number in any contact with Alto-Shaam regarding this appliance.

Model: _____

Serial Number: _____

Date Installed: _____

Voltage: _____

Purchased From: _____

_____

_____

**Alto-Shaam has established a twenty-four hour emergency service call center to offer immediate customer access to a local authorized service agency outside of standard business hours. The emergency service access is provided exclusively for Alto-Shaam equipment and is available throughout the United States through the use of Alto-Shaam's toll-free number. Emergency service access is available seven days a week including holidays.**

# Unpacking

- Carefully remove the appliance from the carton or crate.

  ***NOTE:*** Do not discard the carton and other packaging material until you have inspected the appliance for hidden damage and tested it for proper operation.

  Do not discard this manual. This manual is considered to be part of the appliance and is to be provided to the owner or manager of the business or to the person responsible for training operators. Additional manuals are available from the manufacturer.

- Read all instructions in this manual carefully before installing this appliance, using the appliance or performing routine maintenance. Following procedures other than those indicated in this guide to use and clean the appliance is considered inappropriate and may cause damage, injury or fatal accidents, in addition to voiding the warranty and relieving Alto-Shaam of all liability.
- Remove all protective plastic film, packaging materials, and accessories from the appliance before connecting electrical power. Store any accessories in a convenient place for future use.

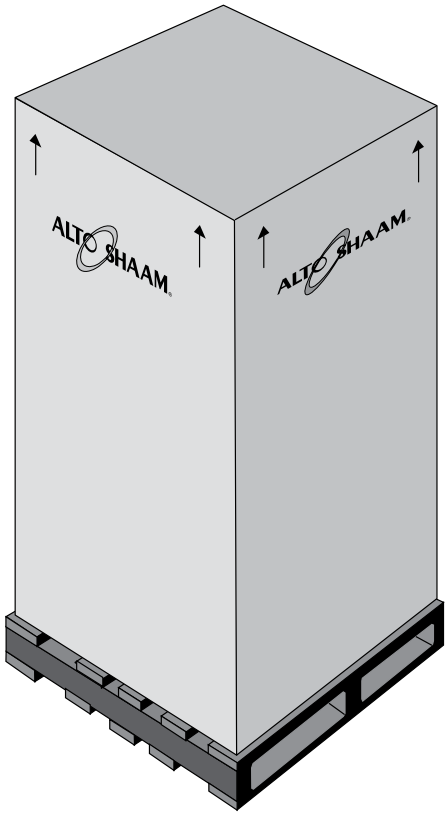

- The appliance is intended to cook, hold or process foods for the purpose of human consumption. No other use for this appliance is authorized and is therefore considered dangerous. The appliance must not be used to cook food containing flammable materials (such as food with alcohol). Substances with a low flash point can ignite spontaneously and cause a fire.
- The appliance is intended for use in commercial establishments where all operators are familiar with the purpose, limitations, and associated hazards of this appliance. Operating instructions and warnings must be read and understood by all operators and users. Alto-Shaam recommends regular staff training to avoid the risk of accident or damage to the appliance. Operators must also receive regular safety instructions.
- Any troubleshooting guides, component views, and parts lists included in this manual are for general reference only and are intended for use by qualified and trained technicians.
- This manual should be considered a permanent part of this appliance. This manual and all supplied instructions, diagrams, schematics, parts lists, notices, and labels must remain with the appliance if the item is sold or moved to another location.

***NOTICE:*** For equipment delivered for use in any location regulated by the following directive: 2012/95/EC WEEE

**Do not** dispose of electrical or electronic equipment with other municipal waste.

Knowledge of proper procedures is essential to the safe operation of electrically and/or gas energized equipment. The following signal words and symbols may be used throughout this manual.

**⚠ DANGER**

Indicates a hazardous situation that, if not avoided, will result in death or serious injury.

**⚠ WARNING**

Indicates a hazardous situation that, if not avoided, could result in death or serious injury.

**⚠ CAUTION**

Indicates a hazardous situation that, if not avoided, could result in minor or moderate injury.

***NOTICE:*** Indicates information considered important, but not hazard-related (e.g., messages relating to property damage).

Indicates that referral to operating instructions is a mandatory action. If not followed the operator could suffer personal injury.

Indicates that referral to operating instructions is recommended to understand operation of equipment.

# Safety Procedures

- To prevent serious injury, death or property damage, the appliance should be inspected and serviced at least every twelve (12) months by an authorized service partner or trained technician.
- **Only** allow an authorized service partner or trained technician to service or to repair the appliance. Installation or repairs that are not performed by an authorized service partner or trained technician, or the use of non-factory authorized parts will void the warranty and relieve Alto-Shaam of all liability.
- When working on this appliance, observe precautions in the literature, on tags, on labels attached to or shipped with the appliance and other safety precautions that may apply.
- If the appliance is installed on casters, freedom of movement of the appliance must be restricted so that utility connections (including gas, water, and electricity) cannot be damaged when the appliance is moved. If the appliance is moved, ensure that all utility connections are properly disconnected. If the appliance is returned to its original position, ensure that retention devices and utility connections are properly connected.
- **Only** use the appliance when it is stationary. Mobile appliance racks, mobile plate racks, transport trolleys, and appliances on casters can tip over when being moved over an uneven floor or threshold and cause serious injury.
- **Always** apply caster brakes on mobile appliances or accessories when these are not being moved. These items could move or roll on uneven floors and cause property damage or serious injury.
- Be extremely careful when moving appliances because the food trays may contain hot fluids that may spill, causing serious injury.
- **Always** open the appliance door very slowly. Escaping hot vapors or steam can cause serious injury or death.

## ⚠WARNING

To prevent **serious personal injury**, **death**, or **property damage**:

The appliance must be cleaned thoroughly to avoid deposits of grease and or food residue inside the appliance that may catch fire. If fat deposits and/or food waste inside the appliance ignite, shut down the appliance immediately and keep the appliance door closed to extinguish the fire. If further extinguishing is required, disconnect the appliance from the main power and use a fire extinguisher (do not use water to extinguish a grease fire!). Failure to clean the appliance properly invalidates the warranty and relieves Alto-Shaam of all liability.

## ⚠WARNING

This appliance is not intended for use by persons (including children) with reduced physical, sensory or mental capabilities, or lack of experience and knowledge, unless they have been given supervision concerning use of the appliance by person responsible for their safety.

Children should be supervised to ensure that they do not play with the appliance.

## ⚠ WARNING

Improper installation, alteration, adjustment, service, cleaning, or maintenance could result in property damage, severe injury, or death.

Read and understand the installation, operating and maintenance instructions thoroughly before installing, servicing, or operating this equipment.

## ⚠ CAUTION

To prevent **personal injury** or **property damage**:

**Always** use hand protection when operating this appliance to avoid burns. Metal parts of this equipment become extremely hot when in operation.

## ⚠ CAUTION

Appliance and accessories may be heavy. To prevent serious injury, **always** use a sufficient number of trained and experienced workers when moving or leveling appliance and handling accessories.

## ⚠ WARNING

To prevent personal injury, death or property damage:

***Do not*** store or use gasoline or other flammable vapors or liquids in the vicinity of this or any other appliance.

## Site Installation

The Alto-Shaam Cook & Hold oven must be installed in a location that will permit the oven to function for its intended purpose and to allow adequate clearance for ventilation, proper cleaning, and maintenance access.

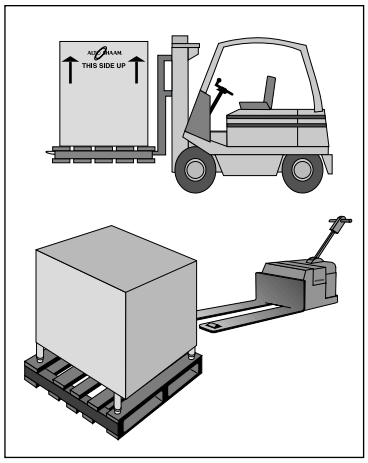


Cook & Hold emissions testing conducted by Underwriters Laboratories, Inc.® was found to be in compliance with the applicable requirements of NFPA96: Eighth Edition, Par. 4.1.1.2. U.L emissions sampling of grease laden vapor resulted in a total of 0.55 milligrams per cubic meter and is considered representative of all oven models in the line.

Smoker resulted in a total of 0.21 milligrams per cubic meter.

Based on these results, hood installation and/or outside venting should not be a requirement in most areas. Verify local codes for locations where more restrictive codes are applicable.

1. The oven must be installed on a stable and level surface.
2. **Do not** install this appliance in any area where it may be affected by any adverse conditions such as steam, grease, dripping water, high temperatures, or any other severely adverse conditions.
3. **Do not** store or use any flammable liquids or allow flammable vapors in the vicinity of this oven or any other appliance.
4. This appliance must be kept free and clear of any combustible materials.
5. This appliance must be kept free and clear of any obstructions blocking access for maintenance or service.

| Clearance Requirements | |
|---|---|
| **Rear** | 3" (76mm) from non-heated surfaces<br>18" (457mm) from heat producing equipment |
| **Top** | 2" (51mm) |
| **Left, Right** | 1" (25mm) |

## NOTICE

**If the appliance has been unplugged for an extended period of time, the Real Time Clock may require recharging. Turn main breaker to the unit off for 10 seconds and then restore power. For more information, see Error Code E-60 in the Troubleshooting section of this manual.**

# Installation

## 300-TH-III

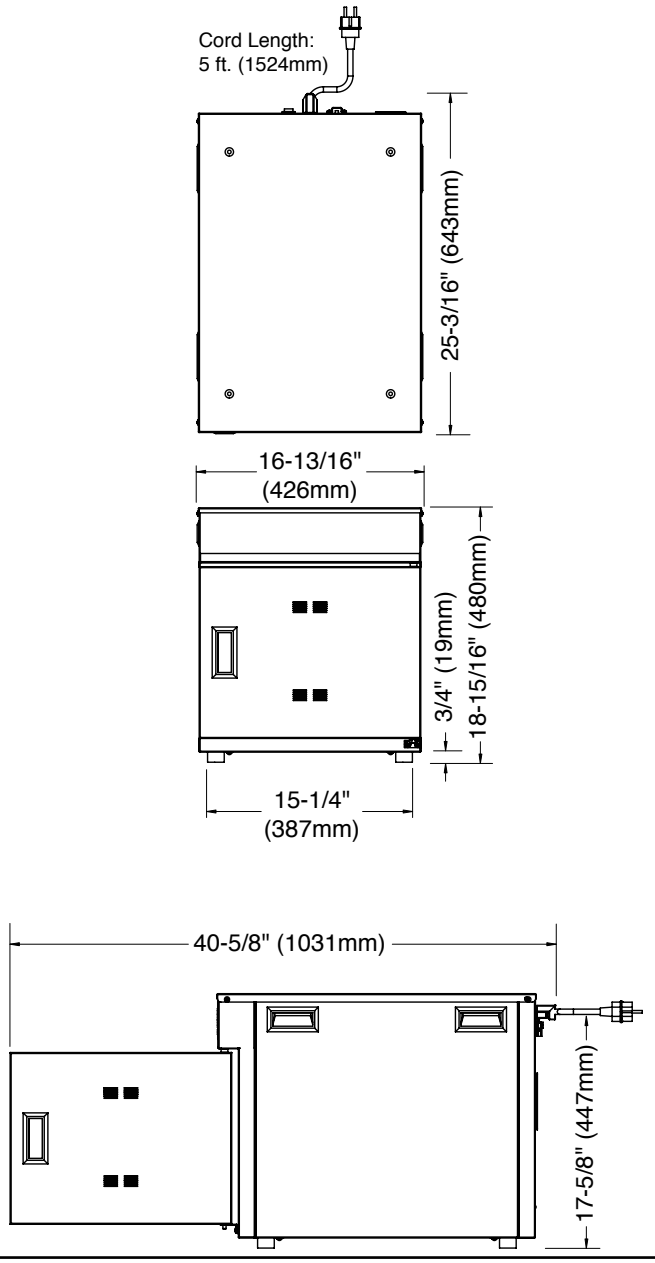


## 500-TH-III

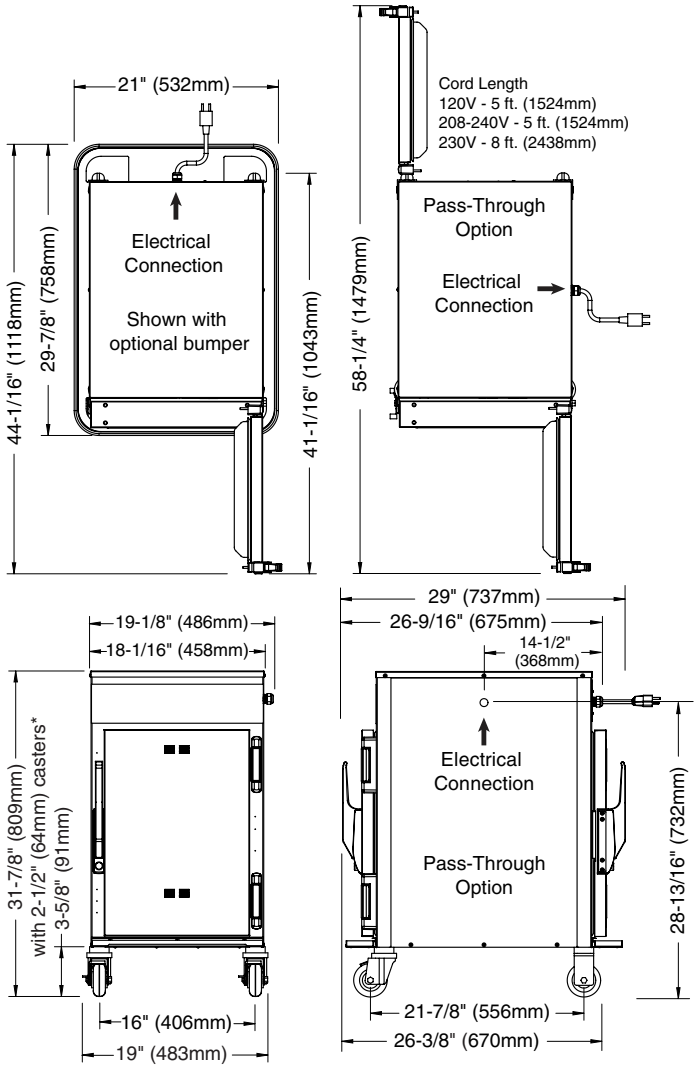


*33-3/8" (848mm) - with optional 3-1/2" (89mm) casters
*35-1/4" (894mm) - with optional 5" (127mm) casters
*33-3/4" (857mm) - with optional 6" (152mm) legs

| **Weight - 300-TH-III** | **Weight - 500-TH-III** |
|---|---|
| **Net:** 69 lb (31 kg) | **Net:** 140 lb (64 kg) |
| **Ship:** Contact factory | **Ship:** 180 lb (82 kg) |
| **Product capacity - 300-TH-III** | **Product capacity - 500-TH-III** |
| 36 lb (16 kg) maximum | 40 lb (18 kg) maximum |
| Volume maximum: 22.5 quarts (28,5 liters) | Volume maximum: 30 quarts (38 liters) |

## 750-TH-III

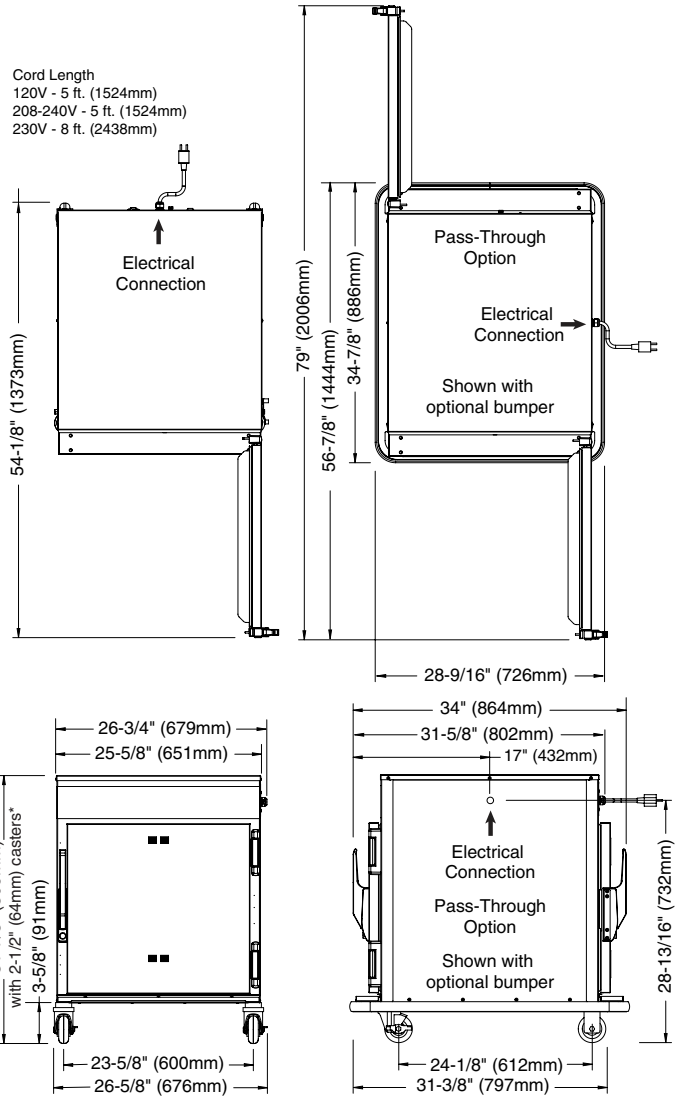


*33-3/8" (848mm) - with optional 3-1/2" (89mm) casters
*35-1/4" (894mm) - with optional 5" (127mm) casters
*33-3/4" (857mm) - with optional 6" (152mm) legs

## 767-SK-III

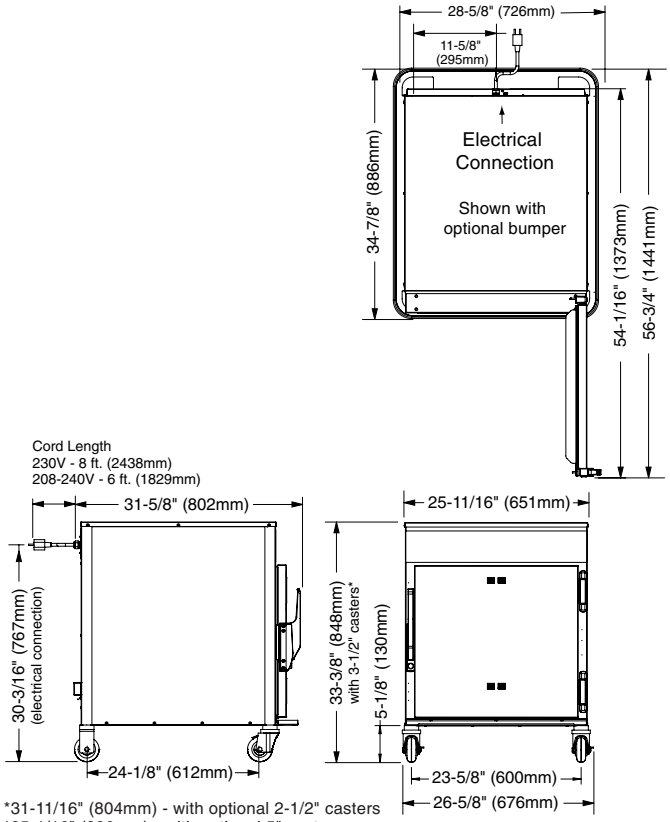


*31-11/16" (804mm) - with optional 2-1/2" casters
*35-1/16" (890mm) - with optional 5" casters
*33-13/16" (858mm) - with optional 6" legs

| Weight | | | Product\Pan capacity |
|---|---|---|---|
| Model | Net Weight | Ship Weight | 100 lb (45 kg) maximum |
| 750-TH-III | 192 lb (87 kg) | 260 lb (118 kg) | |
| 767-SK-III | 196 lb (89 kg) | 275 lb (125 kg) | Volume maximum: 53 quarts (67 liters) |

## 1000-TH-III

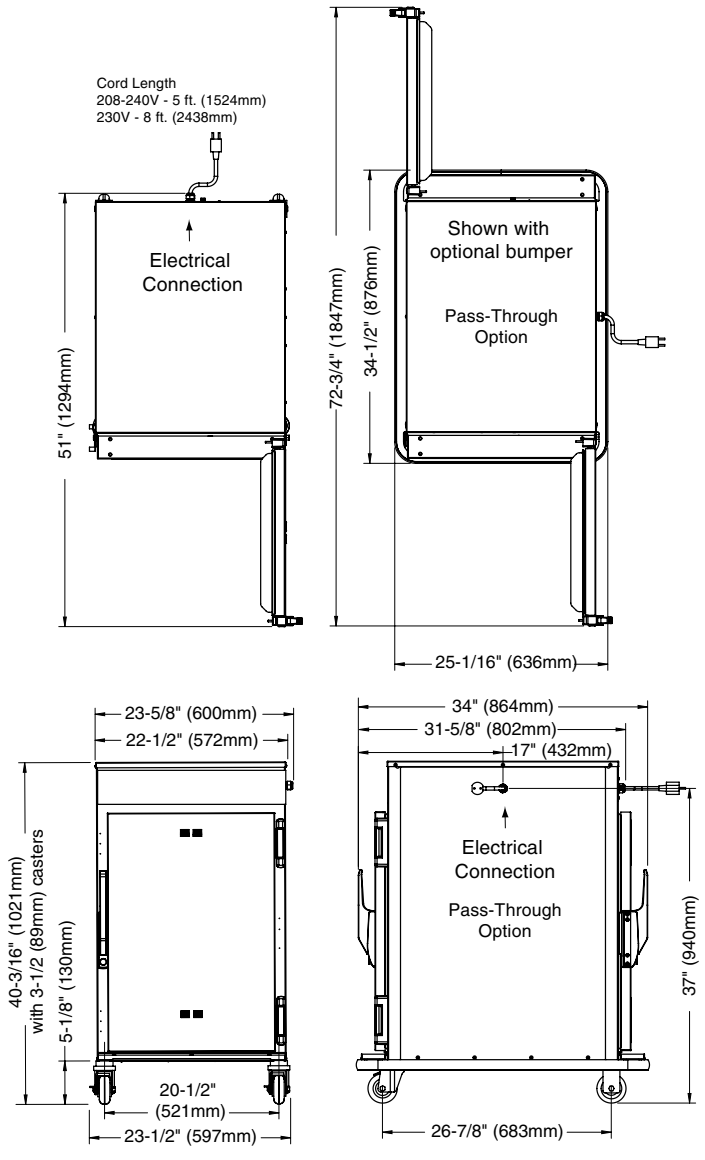


*38-5/8" (981mm) - with optional 2-1/2" casters
*42" (1067mm) - with optional 5" casters
*41-7/8" (1063mm) - with optional 6" legs

## 1000-SK-III

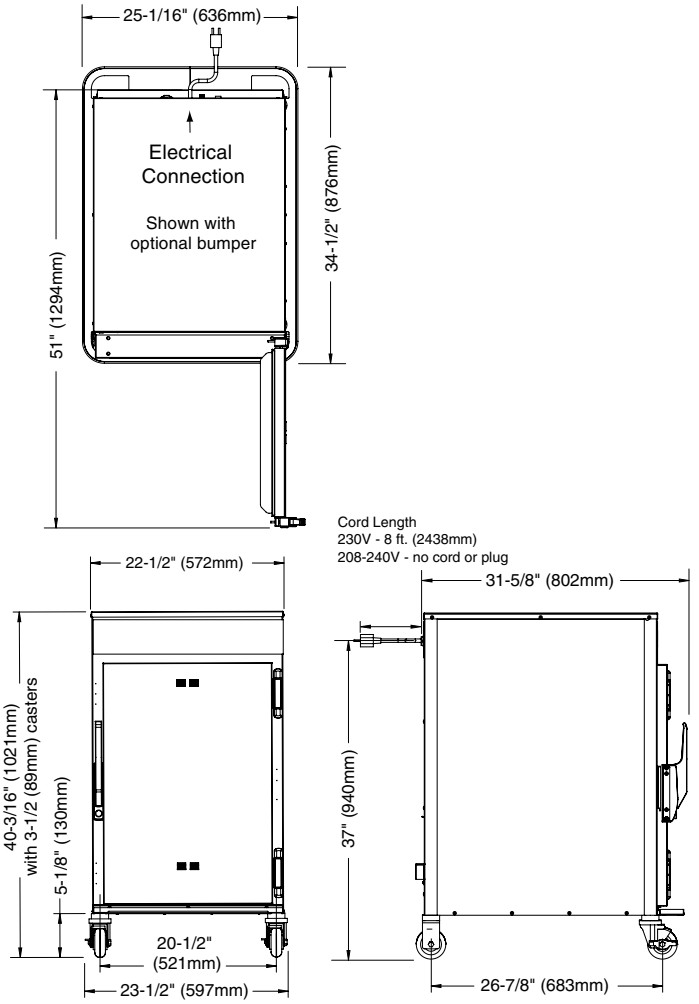


*38-5/8" (981mm) - with optional 2-1/2" casters
*42" (1067mm) - with optional 5" casters
*41-7/8" (1063mm) - with optional 6" legs

| Weight | | | Product\Pan capacity |
|---|---|---|---|
| Model | Net Weight | Ship Weight | 120 lb (54 kg) maximum |
| 1000-TH-III | 230 lb (104 kg) est. | 275 lb (125 kg) | |
| 1000-SK-III | 203 lb (92 kg) est. | 282 lb (128 kg) | Volume maximum: 60 quarts (76 liters) |

## 1200-TH-III

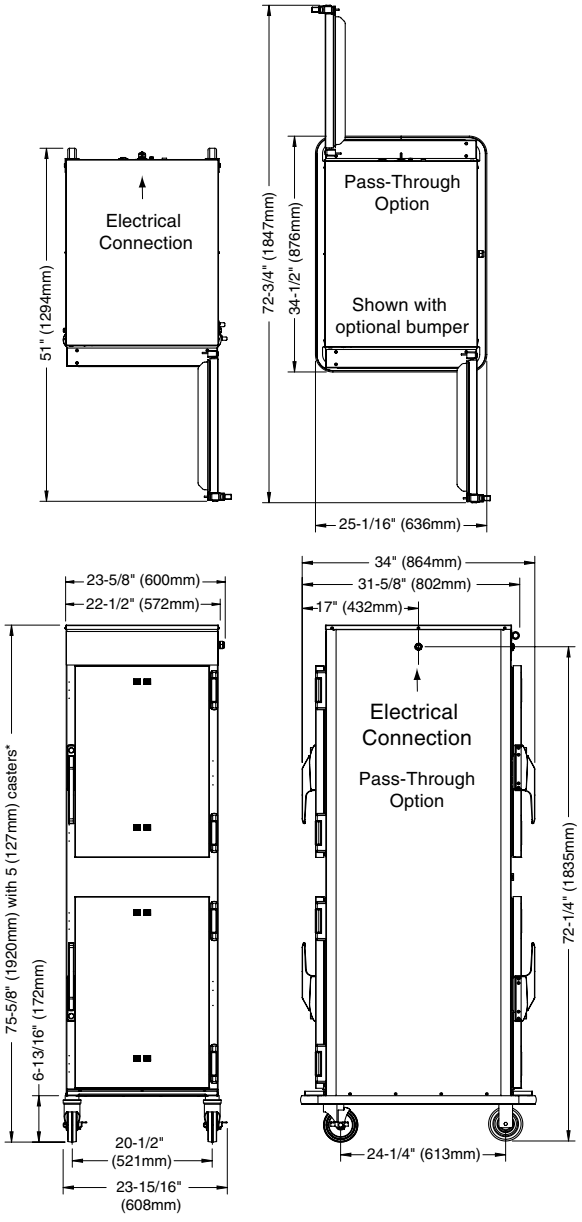


*73-7/8" (1877mm) - with optional 3-1/2" casters
*74-11/16" (1897mm) - with optional 6" legs

## 1200-SK-III

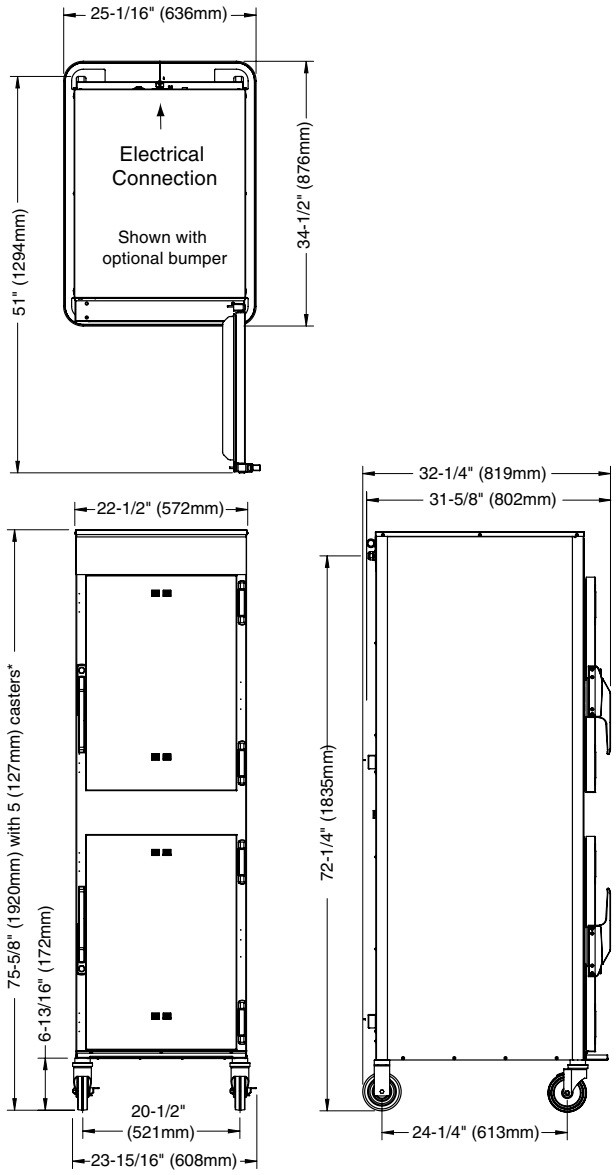


*73-7/8" (1877mm) - with optional 3-1/2" casters
*74-11/16" (1897mm) - with optional 6" legs

| **Weight** | | |
|---|---|---|
| **Model** | **Net Weight** | **Ship Weight** |
| 1200-TH-III | 345 lb (156 kg) | 435 lb (197 kg) |
| 1200-SK-III | 390 lb (177 kg) est. | 465 lb (211 kg) |

| **Product\Pan capacity** (per compartment) |
|---|
| 120 lb (54 kg) maximum |
| Volume maximum: 60 quarts (76 liters) |

## 1767-SK-III

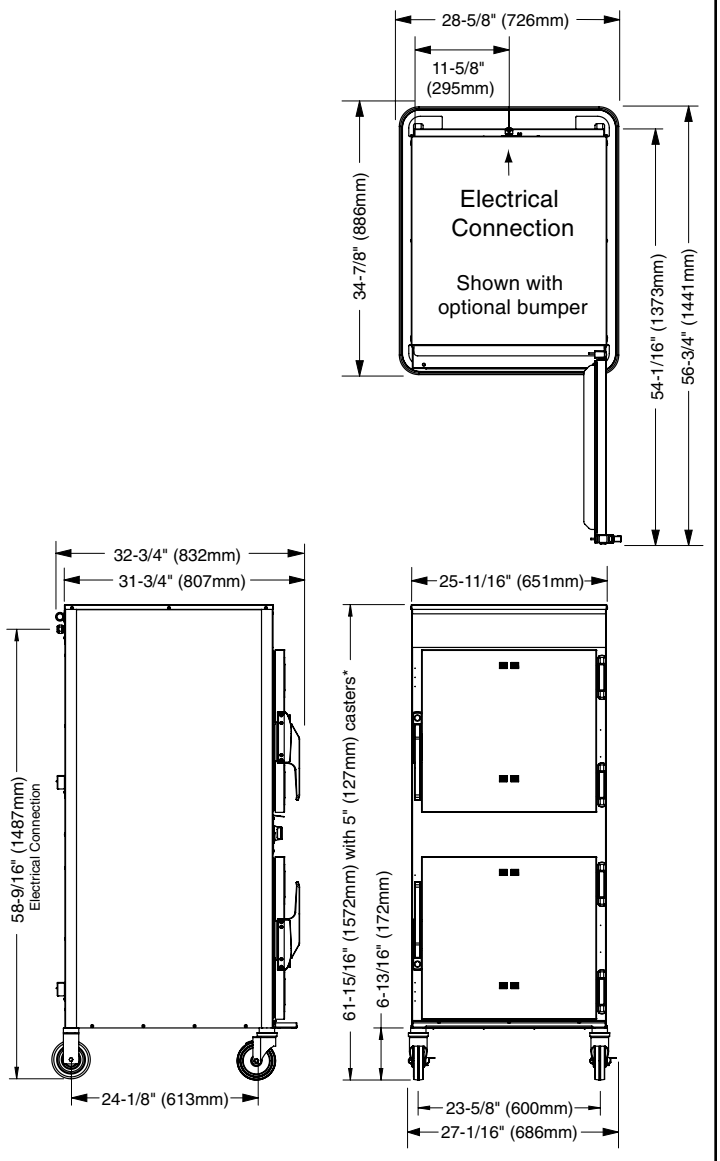


*60-11/16" (1540mm) - with optional 3-1/2" (89mm) casters
*62-1/8" (1577mm) - with optional 6" (152mm) legs

**Weight**

| Model | Net Weight | Ship Weight |
|---|---|---|
| 1767-SK-III | 359 lb (163 kg) est. | 450 lb (204 kg) |

**Product\Pan capacity** (per compartment)

100 lb (45 kg) maximum

Volume maximum: 53 quarts (67 liters)

## Cook & Hold Accessories

| Options and Accessories | 300-TH-III | 500-TH-III | 750-TH-III | 1000-TH-III | 1200-TH-III |
|---|---|---|---|---|---|
| Bumper, Full Perimeter (not available with 2-1/2" casters) | — | 5011161 | 5010371 | 5009767 | 5009767 |
| Carving Holder | | | | | |
| Prime rib | HL-2635 | HL-2635 | HL-2635 | HL-2635 | HL-2635 |
| Steamship (cafeteria) round | — | 4459 | 4459 | 4459 | 4459 |
| Casters - 2 rigid, 2 swivel w/brake | | | | | |
| 5" (127mm) | — | 5004862 | 5004862 | 5004862 | Standard |
| 3-1/2" (89mm) | — | 5008017 | 5008017 | Standard | 5008017 |
| 3" (76mm) | Factory installed | — | — | — | — |
| 2-1/2" (64mm) | — | Standard | Standard | 5008022 | — |
| Door Lock with Key | — | LK-22567 | LK-22567 | LK-22567 | LK-22567 |
| Drip Pan | | | | | |
| With drain | — | 14813 | 14831 | 5005616 | 5005616 |
| Without drain | — | 11898 | 1014684 | 11906 | 11906 |
| Extra deep | PN-2122 | — | — | 15929 | 15929 |
| HACCP Data Logger (factory installed) | 5015563 | 5015563 | 5015563 | 5015563 | 5015563 |
| Legs, 6" (152mm), Stemmed (set of four) | — | 5011149 | 5011149 | 5011149 | 5011149 |
| Pan Grid, Wire - 18" x 26" pan insert | — | — | PN-2115 | PN-2115 | PN-2115 |
| Probe, Sous Vide | PR-34747 | PR-34747 | PR-34747 | PR-34747 | PR-34747 |
| Security Panel with button lock | — | 5013939 | 5013936 | 5013934 | 5013934 |
| Shelf, Stainless Steel | | | | | |
| Flat wire, reach-in | SH-2107 | SH-2326 | SH-2324 | SH-2325 | SH-2325 |
| Flat wire, pass-through | — | SH-2326 | SH-2327 | SH-2346 | SH-2346 |
| Rib rack | — | — | SH-2743 | SH-29474 | SH-29474 |
| Stacking Hardware - | | | | | |
| Over or under TH, SK, or S-Series | — | 5004864 | 5004864 | 5004864 | — |
| Under CTX4-10 Combitherm™ | — | — | 5019679 | 5019679 | — |

## Cook, Hold, Smoke Accessories

| Smoker Options and Accessories | 767-SK-III | 1767-SK-III | 1000-SK-III | 1200-SK-III |
|---|---|---|---|---|
| Bumper, Full Perimeter<br>(not available with 2-1/2" casters) | 5010371 | 5010371 | 5009767 | 5009767 |
| Carving Holder | | | | |
| Prime rib | HL-2635 | HL-2635 | HL-2635 | HL-2635 |
| Steamship (cafeteria) round | 4459 | 4459 | 4459 | 4459 |
| Casters - 2 rigid, 2 swivel w/brake | | | | |
| 5" (127mm) | 5004862 | Standard | 5004862 | Standard |
| 3-1/2" (89mm) | Standard | 5008017 | Standard | 5008017 |
| 2-1/2" (64mm) | 5008022 | — | 5008022 | — |
| Door Lock with Key | LK-22567 | LK-22567 | LK-22567 | LK-22567 |
| Drip Pan | | | | |
| With drain | 14831 | 14831 | 5005616 | 5005616 |
| Without drain | 1014684 | 1014684 | 11906 | 11906 |
| Extra deep | — | — | 15929 | 15929 |
| HACCP Data Logger (factory installed) | 5015563 | 5015563 | 5015563 | 5015563 |
| Legs, 6" (152mm), Stemmed (set of four) | 5011149 | 5011149 | 5011149 | 5011149 |
| Pan Grid, Wire - 18" x 26" pan insert | PN-2115 | PN-2115 | PN-2115 | PN-2115 |
| Probe, Sous Vide | PR-34747 | PR-34747 | PR-34747 | PR-34747 |
| Security Panel with button lock | 5013936 | 5013936 | 5013934 | 5013934 |
| Shelf, Stainless Steel | | | | |
| Fat wire, reach-in | SH-2324 | SH-2324 | SH-2325 | SH-2325 |
| Rib rack | SH-2743 | SH-2743 | SH-29474 | SH-29474 |
| Stacking Hardware - | | | | |
| Over or under TH, SK, or S-Series | 5004864 | — | 5004864 | — |
| Under CTX4-10 Combitherm™ | 5019679 | — | 5019679 | — |
| Wood Chips, bulk pack, 20 lb (9 kg) | | | | |
| Apple | WC-22543 | WC-22543 | WC-22543 | WC-22543 |
| Cherry | WC-22541 | WC-22541 | WC-22541 | WC-22541 |
| Hickory | WC-2829 | WC-2829 | WC-2829 | WC-2829 |
| Maple | WC-22545 | WC-22545 | WC-22545 | WC-22545 |

## Stacking Instructions

1) **If the two appliances were shipped together from the factory, the top appliance will have the casters already removed. A stacking kit will be included with the shipment.**

   If casters need to be removed, lay the appliance on its back, and using a rubber or non-marring hammer, tap on the top and underside of the caster, alternating sides, until the caster slides out.

2) **While appliance is laid on its back, insert one stacking post in each of the four corners of the upper appliance. Secure the stacking posts using one screw and two flat washers that are included with the stacking kit. Use template 68696 to locate set screw hole. Drill with #30 Bit and Tap 8-32.**

   ***NOTE:*** The flange on the stacking posts must face the outside of the appliance.

3) **Remove the four top mounting screws from the lower appliance. Place the upper appliance, which has the stacking posts installed, on top of the bottom appliance. Center the top appliance from front to back. Re-install the four screws through the flange of the four stacking posts.**

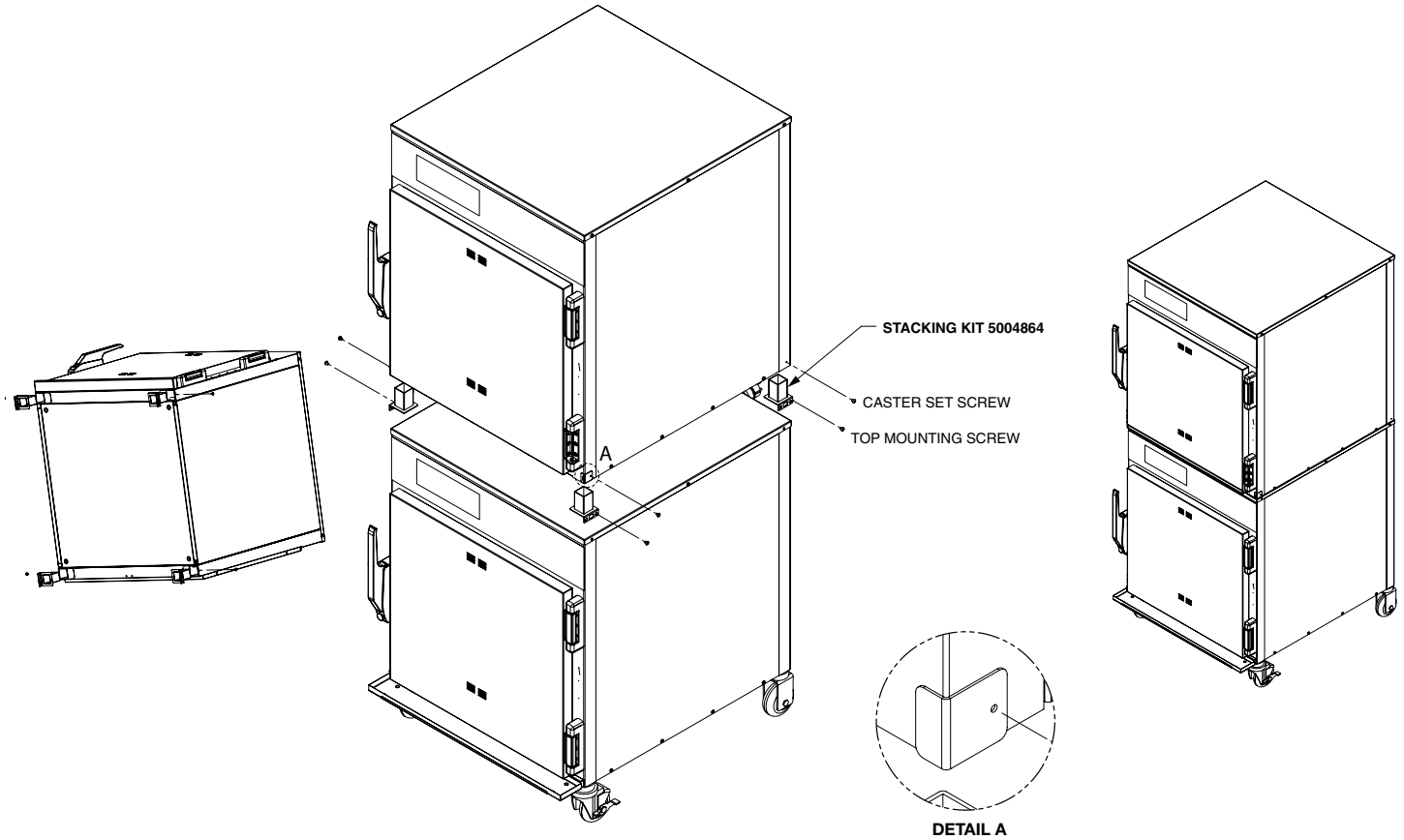


| Stacking Configurations | |
|---|---|
| **Model** | **Can be stacked with** |
| 300-TH-III | 300-TH-III or 300-S<br>No Stacking Hardware needed. Align dimples at top and bottom of units. It is recommended that the legs be removed from the top unit before stacking. |
| 500-TH-III | 500-TH-III, 500-TH-II or 500-S |
| 750-TH-III or 767-SK-III | 750-TH-III, 750-TH-II, 750-S, 767-SK, 767-SK-III |
| 1000-TH-III or 1000-SK-III | 1000-TH-III, 1000-SK-III, 1000-SK/II, 1000-S |

A number of adjustments are associated with initial installation and start-up. It is important that these adjustments be conducted by a qualified service technician. Installation and start-up adjustments are the responsibility of the dealer or user. These adjustments include but are not limited to thermostat calibration, door adjustment, leveling, electrical hook-up and installation of optional casters or legs.

## Leveling

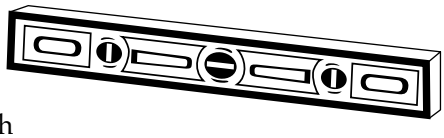

Level the oven from side-to-side and front-to-back with the use of a spirit level. For ovens installed with casters, it is important that the installation surface be level due to the probability of frequent oven repositioning.

We recommend checking the level of the oven periodically to make certain the floor has not shifted nor the oven moved.

***NOTICE:*** Failure to properly level this oven can cause improper function and will result in the uneven baking with products consisting of semi-liquid batter.

## Restraint Requirements —Mobile Equipment

**⚠ WARNING**

**RISK OF ELECTRIC SHOCK.**

Appliance must be secured to building structure. Failure to observe this precaution may result in damage to the equipment and severe personal injury.

Any appliance that is not furnished with a power supply cord but that includes a set of casters must be installed with a tether. Adequate means must be provided to limit the movement of this appliance without depending on or transmitting stress to the electrical conduit. The following requirements apply:

1. Maximum height of casters is 6" (152mm).
2. Two of the casters must of be the locking type.
3. Such mobile appliances or appliances on mobile stands must be installed with the use of a flexible connector secured to the building structure.

A mounting connector for a restraining device is located on the upper back flange of the appliance. A flexible connector is not supplied by nor is it available from the factory.

## Drip tray installation instructions

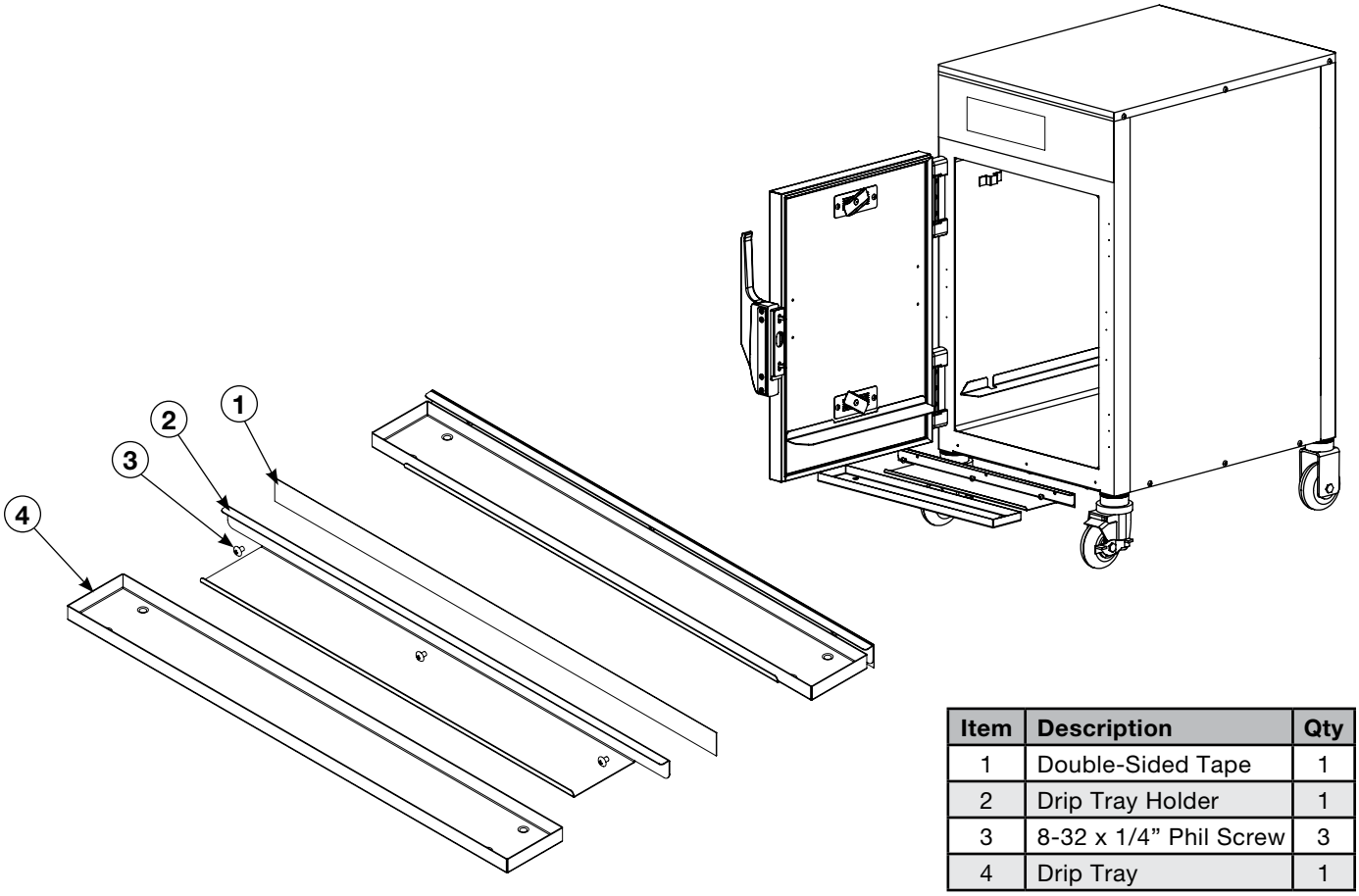


| Item | Description | Qty |
|---|---|---|
| 1 | Double-Sided Tape | 1 |
| 2 | Drip Tray Holder | 1 |
| 3 | 8-32 x 1/4” Phil Screw | 3 |
| 4 | Drip Tray | 1 |

1. Poke holes through double-sided tape (1) which is attached to the back of drip tray holder (2).
2. Remove backing on double-sided tape (1).
3. Put screws (3) through holes and attach drip tray holder (2) to unit.
4. Optional, but strongly recommended - apply a line of food-grade silicone caulk along top edge of drip tray holder (2) to seal.
5. Place drip tray (4) in drip tray holder (2).

**⚠ WARNING**

**Failure to properly install the drip tray can or will cause major equipment damage and will result in a leakage hazard that can cause personal injury.**

## ⚠ WARNING

Appliances without a cord provided by the factory must be equipped with a cord of sufficient length to permit the appliance to be moved for cleaning.

Always use the correct AWG wire size based on the electrical requirements for the appliance.

## ⚠ CAUTION

Power source must match voltage identified on appliance rating tag. The rating tag provides essential technical information required for any appliance installation, maintenance or repairs. Do not remove, damage or modify the rating tag.

The appliance must be installed by a qualified service technician. The oven must be properly grounded in accordance with the National Electrical Code and applicable local codes.

Plug the unit into a properly grounded receptacle **only**, positioning the unit so that the plug is easily accessible in case of an emergency. Arcing will occur when connecting or disconnecting the unit unless all controls are in the "OFF" position.

Proper receptacle or outlet configuration or permanent wiring for this unit must be installed by a licensed electrician in accordance with applicable local electrical codes.

### REGARDING INTERNATIONAL STANDARD UNITS:

If the unit is not equipped with flexible cord and plug, an all-pole country approved disconnection device which has a contact separation of at least 3mm in all poles must be incorporated in the fixed wiring for disconnection. When using a cord without a plug, the green/yellow conductor shall be connected to the terminal which is marked with the ground symbol. If a plug is used, the socket outlet must be easily accessible. If the power cord needs replacement, use a similar one obtained from the distributor.

## ⚠ WARNING

To prevent serious injury, death, or property damage:

All electrical connections must be made by a qualified and trained service technician in accordance with applicable electrical codes.

This appliance must be adequately grounded in accordance with local electrical codes or, in the absence of local codes, with the current edition of the National Electrical Code ANSI/NFPA No. 70. In Canada, all electrical connections are to be made in accordance with CSA C22.1, Canadian Electrical Code Part 1 or local codes.

CE-approved appliances include an equipotential-bonding terminal marked with the symbol shown on the left. Provisions for earthing are to be made in accordance with IEC:2010 60335-1 section 27 or local codes.

### Hard wired models:

Hard wired models must be equipped with a country certified external allpole disconnection switch with sufficient contact separation.

If a power cord is used for the connection of the product an oil resistant cord like H05RN or H07RN or equivalent must be used.

***NOTICE:*** Where local codes and CE regulatory requirements apply, appliances must be connected to an electrical circuit that is protected by an external GFCI outlet.

## Electrical Specifications (Wire diagrams are located inside the bonnet of the unit)

| Voltage | Phase | Hz | Amps | kW | NEMA 5-15p 15a-125v plug | NEMA 5-20p 20a-125v plug | CEE 7/7 Plug rated 250V | CH2-16p Plug rated 250V | BS1363 Plug rated 250V (U.K. only) | AS/NZS 3112 Plug rated 250V |
|---|---|---|---|---|---|---|---|---|---|---|
| **300-TH-III** | | | | | | | | | | |
| 120V | 1 | 60 | 6.7 | .80 | ✓ | ✓ | | | | |
| 230V | 1 | 50/60 | 3.2 | .80 | | | ✓ | ✓ | ✓ | |
| **500-TH-III** | | | | | | | | | | |
| 120V | 1 | 60 | 16.0 | 1.9 | | ✓ | | | | |
| 208V<br>240V | 1 | 60 | 11.2<br>12.5 | 2.7<br>3.0 | Cord, no plug | | | | | |
| 230V | 1 | 50/60 | 12.0 | 2.8 | | | ✓ | ✓ | ✓ | ✓ |
| **750-TH-III** | | | | | | | | | | |
| 120V | 1 | 60 | 14.2 | 1.7 | | ✓ | | | | |
| 208V<br>240V | 1 | 60 | 14.0<br>16.0 | 2.9<br>3.9 | Cord, no plug | | | | | |
| 230V | 1 | 50/60 | 12.2 | 2.8 | | | ✓ | ✓ | ✓ | ✓ |
| **1000-TH-III** | | | | | | | | | | |
| 208V<br>240V | 1 | 60 | 14.0<br>16.0 | 2.9<br>3.9 | Cord, no plug | | | | | |
| 230V | 1 | 50/60 | 12.2 | 2.8 | | | ✓ | ✓ | ✓ | ✓ |
| **1200-TH-III** | | | | | | | | | | |
| 208V<br>240V | 1 | 60 | 29.0<br>33.3 | 6.1<br>8.0 | No cord or plug | | | | | |
| 230V | 1 | 50/60 | 28.7 | 6.6 | No cord or plug | | | | | |
| 380-415V | 3 | 50/60 | 16.5 | 6.0 | No cord or plug | | | | | |
| **1200-TH-III (U.K. ONLY)** | | | | | | | | | | |
| 230V | 1 | 50/60 | 21.5 | 4.9 | No cord or plug | | | | | |
| **767-SK-III** | | | | | | | | | | |
| 208V<br>240V | 1 | 60 | 16.0<br>18.5 | 3.9<br>4.4 | Cord, no plug | | | | | |
| 230V | 1 | 50/60 | 14.0 | 3.1 | | | ✓ | ✓ | ✓ | ✓ |
| **1767-SK-III** | | | | | | | | | | |
| 208V<br>240V | 1 | 60 | 32.0<br>36.3 | 7.7<br>8.7 | No cord or plug | | | | | |
| 230V | 1 | 50/60 | 30.0 | 6.2 | No cord or plug | | | | | |
| 380-415V | 3 | 50/60 | 17.2 | 6.4 | No cord or plug | | | | | |
| **1000-SK-III** | | | | | | | | | | |
| 208V<br>240V | 1 | 60 | 16.0<br>18.3 | 3.3<br>4.4 | Cord, no plug | | | | | |
| 230V | 1 | 50/60 | 14.0 | 3.1 | | | ✓ | ✓ | ✓ | ✓ |
| **1200-SK-III** | | | | | | | | | | |
| 208V<br>240V | 1 | 60 | 32.0<br>36.3 | 7.7<br>8.7 | No cord or plug | | | | | |
| 230V | 1 | 50/60 | 31.5 | 7.2 | No cord or plug | | | | | |

Other plugs are available. Contact factory for more information.

Cord Length: 120V - 6 ft. (1.8m) 208-240V - 9 ft. (2.7m) 230V - 8ft. (2.5m)

**⚠ CAUTION**

To prevent **personal injury** or **property damage**:

**Always** use hand protection when operating this appliance to avoid burns. Metal parts of this equipment become extremely hot when in operation.

The Alto-Shaam cook and hold oven is intended for use in commercial establishments by qualified operating personnel where all operators are familiar with the purpose, limitations, and associated hazards of this appliance. Operating instructions and warnings must be read and understood by all operators and users.

## Start-Up Operation

**Before initial use or after removing the appliance from storage:**

1. Remove all packing material from the appliance.
2. Remove and wash any detachable items such as wire shelves, side racks, pans, and drip pans with hot, soapy water. Dry with a clean damp lint-free cloth.
3. Remove all visible grease or oil from the appliance.
4. Clean the interior and exterior of the appliance with a mild soap and water solution. Apply the solution with a clean damp cloth. Do not use commercial or household cleaners that contain ammonia. Wipe with a clean, damp cloth to remove all detergent residue. Dry with a clean, lint-free cloth.
5. Clean the appliance glass with glass cleaner or distilled vinegar.
6. Install the side racks and wire shelves - position shelves with the curved end up and toward the rear of the appliance. Re-install drip pan.
7. Operate the oven without food for a period of two (2) hours at a temperature of 300°F (149°C) to remove surface oils and any accompanying odor.

The appliance is now ready for operation.

**⚠ WARNING**

To prevent serious personal injury, death, or property damage:

**Do not** steam clean, hose down or flood the interior or exterior with water or liquid solution of any kind. **Do not** use water jet to clean. Failure to observe this precaution will void the warranty.

**⚠ WARNING**

To prevent serious injury, death, or property damage, **always** disconnect the appliance from the power source before cleaning or servicing.

## Audible Signals

Oven beeping indicates a response, mode changes, and error conditions.

***One brief beep*** - response to a button being pressed.

***Two brief beeps*** - informative beep that indicates that something has been changed, such as the user entering a volume change, entering a temperature scale change, etc.

***Three brief beeps*** - indicates the oven is done preheating, the probe has exceeded set-point in cold smoking, the door has been open too long, or the control is unlocked.

***Four brief beeps*** - indicates an error. Refer to the Troubleshooting section of this manual.

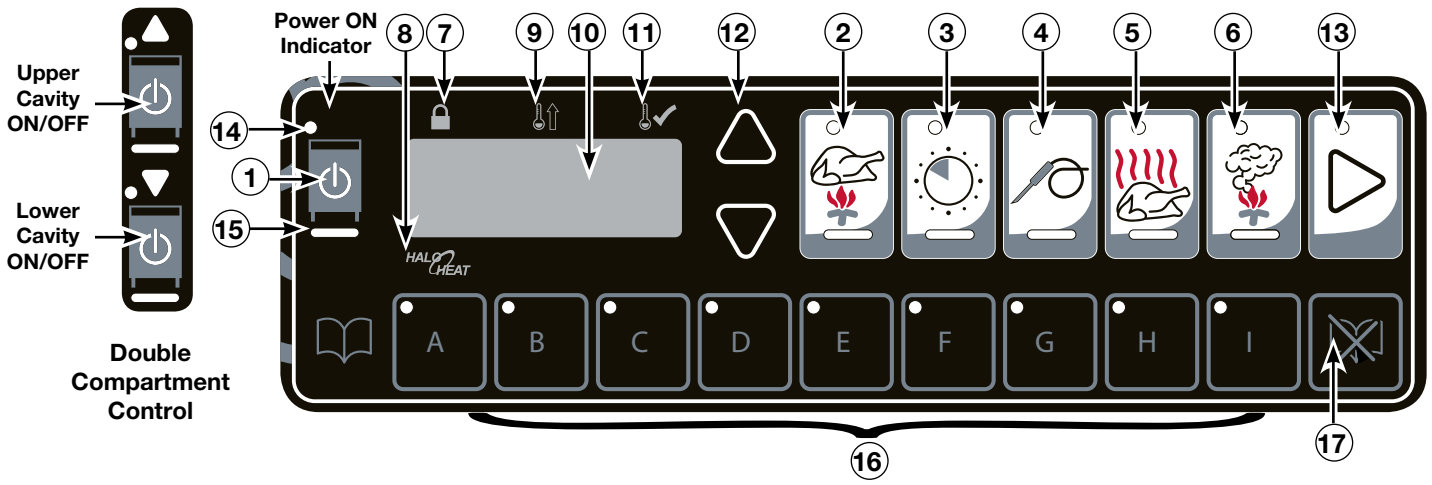


## Control Features

1. **On/Off Button**
   The On/Off control system button operates the functions of the control panel. If there is any power loss during operation, the on/off indicator light will flash. To clear, push button and release.
2. **Cook Button — Temperature range 200°F to 325°F (93°C to 162°C)**
   Used to select cooking mode and to review the cook temperature setting.
3. **Time Button — Maximum time 24 hours**
   Used to select cook time and to review set time.
4. **Probe Button — Temperature range 50°F to 195°F (10°C to 91°C)**
   Used to select internal product probe temperature mode, review probe temperature setting, enable Probe Hold mode, and edit probe holding temperature.
5. **Hold Button — Temperature range 60°F to 205°F (15°C to 96°C)**
   Used to select food holding mode and to review set holding temperature.
6. **Smoker Button — Time range 0 to 4 hours**
   Used to select warm smoke or cold smoke and to review the smoke time remaining.
7. **Lock Indicator**
   When illuminated, this symbol indicates settings used in the cooking sequence are locked and cannot be changed.
8. **Halo Heat Indicator**
   When the oven is preheating, the Halo Heat indicator will illuminate during preheating and remain steady until the oven reaches the set cooking temperature. When the temperature has stabilized, the indicator will illuminate periodically as the oven calls for heat.
9. **Oven Preheat Light**
   Illuminates until the oven is preheated or in ready mode.
10. **LED Display**
    Indicates interior oven air temperature, internal product probe temperature, time, or when used in conjunction with other buttons, will review original cooking, holding and probe temperature settings. The display will also indicate various programming and diagnostic information.
11. **Ready Indicator Light**
    Illuminates when the oven has finished preheating.
12. **Up/Down Arrows**
    Used to increase or decrease set time, including cooking, holding and probe temperature settings.
13. **Start Button**
    Used to initiate a selected mode sequence when pressed and released. You may stop any mode of operation by pressing and holding the Start button until you hear a 2-second beep.
14. **Green Indicator Lights**
    Located within each function button, the green light functions as an operator prompt indicating additional operator action is required and also identifies current mode of operation.
15. **Amber Indicator Lights**
    Located below the Cook, Time, Probe and Hold buttons, these indicators will illuminate to identify the current mode of operation and allows the operator to identify the information currently shown in the LED display.
16. **Preset Program Buttons**
    Provides memory storage and operation of up to eight operator set cooking programs for specific products (A thru H). I enables locking abilities.
17. **Cancel Button**
    Used to erase a program from memory storage.

## IMPORTANT

**Do not use the oven if the controls are not properly functioning. Refer to the Troubleshooting Guide located in this manual or call an authorized service technician.**

## Cook/Hold/Smoke Instructions

**Press and release control On/Off button.** The oven will beep for one second and power to the unit will be indicated by an illuminated green indicator light located in the upper left corner of the On/Off button. The oven will begin operating in the hold mode. The amber hold indicator will be illuminated and the last set hold temperature will be displayed.

**Set cook temperature —** Press **Cook** button. Oven preheat indicator will illuminate and the last set cooking temperature will displayed. Press the **Up** or **Down Arrow** buttons to change the cook temperature.

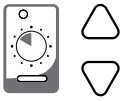

**If cooking by time —** Press the **Time** button. The green time indicator will illuminate and the last set cooking time will be displayed. Press the **Up** or **Down Arrow** buttons to change the set time. The display will alternate between the set temperature and the elapsed time.

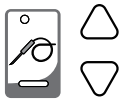

**If cooking by probe** — Press the **Probe** button. The green probe indicator will illuminate and the last set internal product temperature will be displayed. Press the **Up** or **Down Arrow** buttons to change the set temperature. The display will alternate between the set temperature, the elapsed time, and the probe temperature.

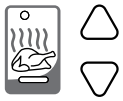

**Set hold temperature —** Press the **Hold** button. The green cook indicator light will remain illuminated. Press the **Up**/**Down Arrow** buttons to change set hold temperature. The display will alternate between the set hold temperature and the amount of time the product has been in the hold mode. Oven will remain in the hold mode until the **On/Off** button is pressed.

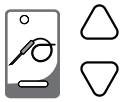

**To enable Probe Hold mode (optional when cooking by probe) —** Press the **Probe** button. The probe cooking temperature will be displayed. Press the **Probe** button again to toggle to the Probe Hold temperature. The yellow LEDs below the **Probe** and **Hold** buttons will alternate, signaling the Probe Hold mode. Press the **Up** or **Down Arrow** buttons to set probe holding temperature.

**Set Smoke time if desired (hot smoke) —** Press **Smoke** button. Press the **Up** or **Down Arrow** buttons to set the smoke time desired. The last set time will be displayed.

**To save program to a preset —** Select desired **Preset** button (A-H) for the product programmed by the previous steps. Press and hold the selected **Preset** button for two seconds. When the preset has been saved, you will hear a one second beep and the preset light will illuminate.

***NOTICE:*** Only one preset can be programmed at a time. If programming an additional preset is desired, the unit must be started and stopped either by cycling the power to the cavity or by pressing the **Start/Stop** button. The last **Preset** button used will be the oven cooking run sequence for the next product to be programmed. Settings can be manually changed for the next product and an alternate pre-programmed letter button selected.

**Start cooking cycle -** Press **Start** button.

## To Cook/Hold/Smoke using Preset Menu Buttons

Press desired **Preset** button (A through H). **Preset** buttons with stored cooking programs will have green indicator illuminated. The oven will automatically enter preheat mode. Oven will beep periodically when it has reached a preheat ready state, and both the Ready and Start indicator lights will flash.

**Start cooking cycle -** Press **Start** button.

**To Erase a Preset —** Oven must be in either the power-up hold mode or in the preheat mode. The oven cannot be running a **Preset** menu program.

When the oven is in the power-up hold mode or in the preheat mode, press and hold the **Cancel** button and then the appropriate letter **Preset** button to be erased for two seconds. When the preset has been erased the oven will beep for one second.

**Important - After programming a specific product into memory in a programmable preset button, it is very important to make a written permanent record of the product and the program letter assigned. Menu card (PE-23384) is provided for this purpose.**

## Operating Features & Functions

**To stop an operation at any time :**

Press and hold the Start button until the control beeps for two seconds, indicating the operation has been cancelled. The oven will remain in a power-on state.

**To turn oven control panel off*:***

Press and hold the **On/Off** button until the oven beeps. The On/Off indicator light will go out.

**Door open indicator:**

Display will flash "door" and a triple beep will alert the user. Press **On/Off** button to acknowledge error and disable triple beep.

**Arrow Buttons:**

Cook, Hold and Probe temperature, and the time setting can be adjusted by pressing the Up or Down Arrow buttons. Pressing and releasing the **Up** or **Down** Arrow button will change settings in increments of one. To change a setting more rapidly, press and hold the **Up** or **Down** Arrow button. Once the setting reaches a number divisible by 10, it will begin to increase in increments of 10.

**Green and amber indicators:**

Each program button includes a green light which indicates a requirement for additional programming by the operator or the current operational state of the oven.

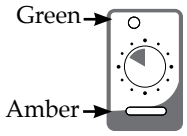


The Cook, Time, Probe, and Hold buttons include an amber indicator light to identify the information being displayed.

**Power fail detect:**

If the power were to fail for any reason while heating, the control will retain, in memory, the programmed operating conditions. When power is restored, the control will resume operating from the point where it was interrupted and the On/Off indicator light will flash, indicating that such an event did occur. The operator can acknowledge the power failure by pressing the **On/Off** button. Pressing the button will display the amount of time that the power has been off. The control will stop counting the amount of time the power has been off when it has been off for more than 24 hours.

***NOTICE:*** If such an event has occurred, it is strongly recommended that you ensure the food is safe for consumption according to local health regulations.

**To set date and time:**

All oven cavities must be turned Off.

**To set time of day (HH:mm) Hours/minutes** - press and hold "A" button for three seconds, then press Up/Down Arrow button.

**To set year** - press and hold "B" button for three seconds, then press the **Up** or **Down** Arrow button.

**To set month and day (MM.dd)** - press "C" button for three seconds, then press the **Up** or **Down** Arrow button.

## Operating Features and Functions

**To Enable Probe Hold (optional when cooking by Probe)**

- Press the Probe button to see the probe cooking temperature.

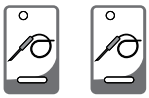

- Press the Probe button again to toggle to the probe hold temperature.

***NOTICE:*** The yellow LEDs below the Probe and Hold buttons will alternate, signaling the Probe Hold mode.

- Press the Up/Down arrow buttons to set desired probe holding temperature.

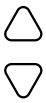

- Press Start button to begin cooking cycle.

**Display High/Low Probe Temperatures:**

To observe the recorded maximum or minimum probe temperature when cooking by probe, press the following buttons while the probe remains in the product:

**Highest Temperature:** Press Probe button and Up Arrow button at same time.

**Lowest Temperature:** Press Probe button and Down Arrow button at same time.

**Probe Calibration:**

1. To verify product probe calibration, place the probe in a glass of ice water.
2. After allowing the temperature to settle, press the probe button for five (5) seconds. Compare reading against 32°F (0°C).
3. If calibration is required, the unit must be in the power up hold mode. From the off state turn the unit on. The unit will begin to operate in the power up hold mode, press the probe button for eight (8) seconds until the unit beeps twice and a temperature is displayed. Adjust the probe offset temperature by pressing the up or down arrows to increase or decrease the temperature. Repeat step 2 to verify.
4. Repeat steps 1 and 2 to verify the probe calibration as necessary.

**Probe Usage:**

When the oven probe remains inserted in the probe bracket, the LED temperature display will indicate the ambient air temperature inside the oven. To use the probe for cooking remove it from the bracket and wipe the full length of the metal probe with a disposable alcohol pad to clean and sanitize before using.

Only the tip of the probe senses the internal product temperature; therefore, it is important the tip be placed correctly in the product for internal temperature accuracy. Push the probe tip halfway into the product, positioning the tip at the center of the food mass, avoiding the bone. When inserting the probe into solid foods such as meat roast or poultry breasts, push the probe in from a straight downward position or in from the side to the center position. If placing into a semi-liquid or liquid product, the probe cable must be secured to keep the probe positioned properly. Do not let the probe tip touch the edges, bottom or side of a container. Tape the probe cable to the lip or edge of the container.

**Sous Vide Cooking:**

With the oven in a preheat mode, press and hold the Probe button. After 5 seconds, it will display "SouS" if in sous-vide mode, or " rE9" if in a regular probe mode. If changes are desired, continue holding the Probe button for an addition three seconds which will toggle the option.

When cooking by probe, insert the probe into the raw product after the oven has been preheated.

**Wait one full minute** to allow the probe temperature to decrease to the internal temperature of the product. Press the start button to begin the cooking process after this probe temperature adjustment period. A false probe reading of the internal product temperature will cause the oven to default to a holding temperature.

**⚠ CAUTION**

**To maintain safe temperature levels, cold food for rethermalization or reheating must never be added to the oven while hot foods are being held.**

### Preparation

Adjust the inside door vents per the individual cooking procedure selected. Always keep door vents closed when cooking with the smoking function. Insert drip pan on the bottom of the oven cavity.

### Wood Chips

Soak one full tray of wood chips in water for 5 to 10 minutes. Shake off excess water, and place the moistened chips in the wood chip tray of the smoker oven. Replace the container in the oven.

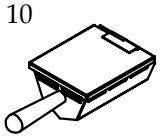

**⚠ WARNING**

**Fire Hazard**

The use of improper materials for the smoke function could result in a fire which may lead to personal injury or property damage.

**Do not** use sawdust for smoking. **Do not** use wood chips smaller than 1/2" (13mm) diameter.

Use Alto-Shaam approved wood chips for the smoke function in this appliance.

## Hot Smoke Procedure

Press and release On/Off button.

Press and set Cook thermostat to required cooking temperature.

Press and set Time or Probe.

Press and set Hold thermostat to required holding temperature.

Enable and set Probe Hold mode if desired.

The Oven is automatically programmed to preheat to the set cooking temperature. The oven will produce an audible signal when fully preheated.

Prepare product for cooking.
Load product on shelves.

### To Set Smoking Time

Press the Smoker Button.
Press the Up/Down arrow buttons to select the smoke time in minutes.
Press Start.

***NOTICE***: The smoking timer activates the heating element located within the wood chip container when in either a cook or hold mode. The smoke element will not turn on during preheat or ready modes. A full wood chip container will produce smoke for a period of approximately 1 hour, even though the timer can go past one hour.

*For maximum product tenderizing and to reduce labor during peak preparation hours, products can be cooked and held overnight.*

*These instructions are basic operational guidelines only. For complete instructions, see the Halo Heat Cooking, Holding, Smoking Guidelines provided with the oven.*

## Cold Smoke Procedure

### To Enter Cold Smoke Mode

Press and release power switch On/Off Control button.

Press and hold the Smoker Button for a period of 3 seconds.

### To Set Cold Smoke Holding Temperature

The temperature will default to the last smoke holding temperature set by the user. The holding temperature range is 14°F to 205°F (-10°C to 96°C).

To increase this default temperature, press the Hold button and press the Up Arrow to set a higher default temperature.

### To Set Smoking Verification Temperature (IF DESIRED)

Press the Probe button
Press the Up/Down Arrow buttons to select the verification temperature. The probe range is 14°F to 195°F (-10°C to 91°C).

This will incorporate the probe into the cold-smoking process and the control will alarm if the temperature exceeds the probe set point.

### To Set Smoking Time

Press the Smoker button.
Press the Up/Down Arrow buttons to select the smoke time in minutes.

Prepare product for smoking.
Place stainless steel tray filled with ice on shelf above the smoker tray.
Load product on shelves.

Press Start.

| Taste preference | Minimum Smoking time |
|---|---|
| Light Smoke Flavor | 10 min. |
| Medium Smoke Flavor | 30 min. |
| Heavy Smoke Flavor | 40 min. |
| Very Heavy Smoke Flavor | 60 min. |
| Extra Heavy Smoke Flavor | 80 min. |

## User Options

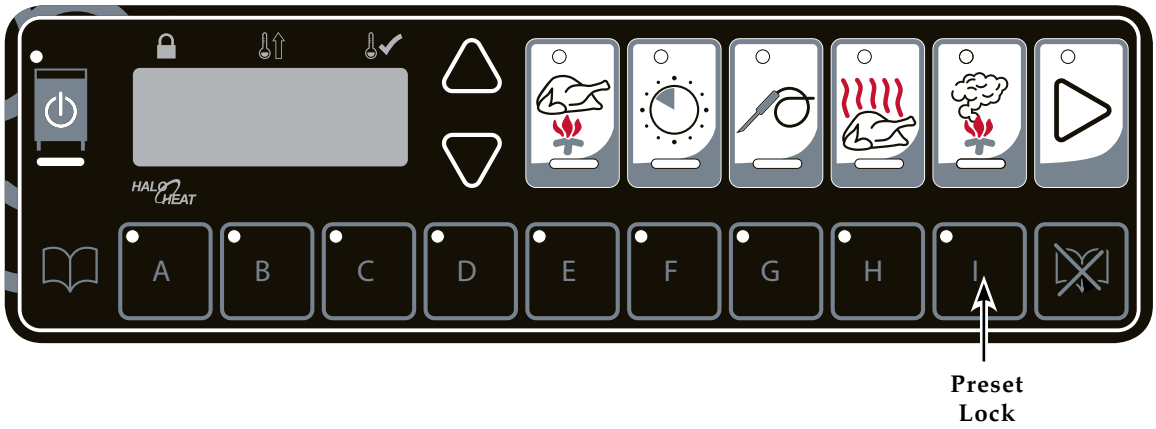


### Preset Buttons Lock and Unlock

Preset buttons A through H can be locked in order to prevent storing, altering or erasing a program.

To lock the Preset buttons, press and hold the "I" button until the oven beeps. Release the "I" button. The green indicator light on the "I" button will illuminate. Oven Preset buttons A through H are now locked.

***NOTICE:*** Only the oven Preset buttons A through H are affected by this lock-out in order to also allow the oven to be used with the unprogrammed Cook, Probe, or Hold modes.

To unlock the Preset buttons, press and hold the Cancel button along with the "I" button for two seconds until the "I" button light no longer illuminates. Release all buttons. The oven preset buttons are now unlocked.

### Fahrenheit or Celsius Selection

With the control in the Off mode, press and hold the Up Arrow button until the display shows the current selection. Press the Up/Down Arrow buttons to toggle between the two options. After each change the button must be released. The display must clear before the procedure can be repeated.

### Control Panel Lock and Unlock

The control panel can be locked at any time in order to prevent inadvertent or accidental setting changes.

To lock the control panel, press and hold the Up Arrow button and then press the On/Off button. You will hear a brief beep and the panel lock indicator will illuminate. Release all buttons. The oven's control panel is now locked.

***NOTICE:*** The control panel is now fully locked with the exception of the On/Off button and Up/Down Arrow buttons. You will be unable to turn the oven control off at this point.

To unlock the control panel, press and hold the Down Arrow button and then press the On/Off button. You will hear three beeps and the panel lock indicator light will extinguish. Release all buttons. The panel is now unlocked and ready for normal use.

### Beeper Volume Selection

With the control in the Off mode, press and hold the Down Arrow button until the display shows the current control volume. Press the Up or Down Arrow button to cycle through the four options (0 = Off, 1 = Low, 2 = Mid, 3 = High).

## HACCP

### HACCP Documentation, Data Logger - Optional

This oven meets the requirements of established HACCP criteria by providing automated sampling, record keeping, set-point validation, recipe used, dates and time. This data is retained for the last 30 days. This information can be viewed on screen or downloaded to a USB drive and then copied to your computer. The file format is a comma-separated variable (*.csv), that is easily opened using a spreadsheet software.

| | A | B | C | D | E | F | G |
|---|---|---|---|---|---|---|---|
| 1 | Unit Serial Number 01:10:04 | | | | | | |
| 2 | Software Version: 0.12 | | | | | | |
| 3 | Control Personality: 0 | | | | | | |
| 4 | Start Time 7/26/2012 10:33 | | | | | | |
| 5 | Cavity Upper | | | | | | |
| 6 | Program Name Preset A | | | | | | |
| 7 | Cook Set Temperature (°F) 250 | | | | | | |
| 8 | Cooking by: Time | | | | | | |
| 9 | Cook Time 2:24 | | | | | | |
| 10 | Hold Set Temperature (°F) 150 | | | | | | |
| 11 | | | | | | | |
| 12 | | | | | | | |
| 13 | | | | | | | |
| 14 | Date Time Mode Cavity Set-Temperature (°F) Cavity (°F) Probe (°F) Additional Information | | | | | | |
| 15 | 7/26/2012 10:33:57 Preheat 250 250 146 | | | | | | |
| 16 | 7/26/2012 10:37:29 Cook 250 249 146 | | | | | | |
| 17 | 7/26/2012 10:38:57 Cook 250 251 146 | | | | | | |
| 18 | 7/26/2012 10:43:57 Cook 250 250 146 | | | | | | |
| 19 | 7/26/2012 10:47:29 Hold 150 150 146 | | | | | | |
| 20 | 7/26/2012 10:48:57 Hold 150 151 146 | | | | | | |
| 21 | | | | | | | |
| 22 | | | | | | | |
| 23 | | | | | | | |

HACCP Data Sample

**To download the data collected:**

1. All oven cavities must be turned Off.
2. It is recommended that a completely empty USB flash drive is used. Remove the cap of the USB port located on the right side of the control panel and insert the USB flash drive. Display will show "Usb". If display does not show "Usb", try again with another flash drive device or call Alto-Shaam Service.
3. Press and hold the Start button until display shows "Ξ XYZ". The number at the far right is the percentage of the download completed. The Start button indicator light will flash while the download is in process. When display shows "Ξ 100", the download is complete.
4. Remove the USB flash drive and replace the cap on the USB port. When the USB is removed, the oven will beep for 1-second, acknowledging the removal.

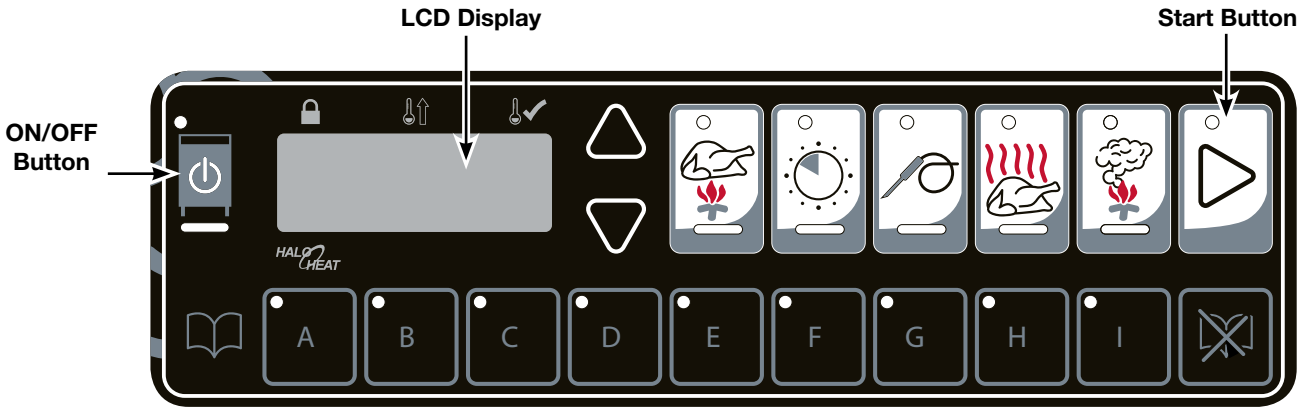

## General Holding Guidelines

Chefs, cooks and other specialized food service personnel employ varied methods of cooking. Proper holding temperatures for a specific food product must be based on the moisture content of the product, product density, volume, and proper serving temperatures. Safe holding temperatures must also be correlated with palatability in determining the length of holding time for a specific product.

Halo Heat maintains the maximum amount of product moisture content without the addition of water, water vapor, or steam. Maintaining maximum natural product moisture preserves the natural flavor of the product and provides a more genuine taste. In addition to product moisture retention, the gentle properties of Halo Heat maintain a consistent temperature throughout the cabinet without the necessity of a heat distribution fan, thereby preventing further moisture loss due to evaporation or dehydration.

When product is removed from a high temperature cooking environment for immediate transfer into equipment with the lower temperature required for hot food holding, condensation can form on the outside of the product and on the inside of plastic containers used in self-service applications. Allowing the product to release the initial steam and heat produced by high temperature cooking can alleviate this condition. To preserve the safety and quality of freshly cooked foods, however, a maximum of 1 to 2 minutes must be the only time period allowed for the initial heat to be released from the product.

Most Halo Heat Holding Equipment is provided with a thermostat control between 60°F and 200°F (16° to 93°C). If the unit is equipped with vents, close the vents for moist holding and open the vents for crisp holding.

| Holding Temperature Range | | |
|---|---|---|
| **Meat** | **Fahrenheit** | **Celsius** |
| Beef Roast — Rare | 130°F | 54°C |
| Beef Roast — Med/Well Done | 155°F | 68°C |
| Beef Brisket | 160°F–175°F | 71°C–79°C |
| Corn Beef | 160°F–175°F | 71°C–79°C |
| Pastrami | 160°F–175°F | 71°C–79°C |
| Prime Rib — Rare | 130°F | 54°C |
| Steaks — Broiled/Fried | 140°F–160°F | 60°C–71°C |
| Ribs — Beef Or Pork | 160°F | 71°C |
| Veal | 160°F–175°F | 71°C–79°C |
| Ham | 160°F–175°F | 71°C–79°C |
| Pork | 160°F–175°F | 71°C–79°C |
| Lamb | 160°F–175°F | 71°C–79°C |
| **Poultry** | | |
| Chicken — Fried/Baked | 160°F–175°F | 71°C–79°C |
| Duck | 160°F–175°F | 71°C–79°C |
| Turkey | 160°F–175°F | 71°C–79°C |
| General | 160°F–175°F | 71°C–79°C |
| **Fish/Seafood** | | |
| Fish — Baked/Fried | 160°F–175°F | 71°C–79°C |
| Lobster | 160°F–175°F | 71°C–79°C |
| Shrimp — Fried | 160°F–175°F | 71°C–79°C |
| **Baked Goods** | | |
| Breads/Rolls | 120°F–140°F | 49°C–60°C |
| **Miscellaneous** | | |
| Casseroles | 160°F–175°F | 71°C–79°C |
| Dough — Proofing | 80°F–100°F | 27°C–38°C |
| Eggs — Fried | 150°F–160°F | 66°C–71°C |
| Frozen Entrees | 160°F–175°F | 71°C–79°C |
| Hors d'oeuvres | 160°F–180°F | 71°C–82°C |
| Pasta | 160°F–180°F | 71°C–82°C |
| Pizza | 160°F–180°F | 71°C–82°C |
| Potatoes | 180°F | 82°C |
| Plated Meals | 140°F–165°F | 60°C–74°C |
| Sauces | 140°F–200°F | 60°C–93°C |
| Soup | 140°F–200°F | 60°C–93°C |
| Vegetables | 160°F–175°F | 71°C–79°C |
| The holding temperatures listed are suggested guidelines only. All food holding should be based on internal product temperatures. Always follow local health (hygiene) regulations for all internal temperature requirements. | | |

## Protecting Stainless Steel Surfaces

It is important to guard against corrosion in the care of stainless steel surfaces. Harsh, corrosive, or inappropriate chemicals can completely destroy the protective surface layer of stainless steel. Abrasive pads, steel wool, or metal implements will abrade surfaces causing damage to this protective coating and will eventually result in areas of corrosion. Even water, particularly hard water that contains high to moderate concentrations of chloride, will cause oxidation and pitting that result in rust and corrosion. In addition, many acidic foods spilled and left to remain on metal surfaces are contributing factors that will corrode surfaces.

Proper cleaning agents, materials, and methods are vital to maintaining the appearance and life of this appliance. Spilled foods should be removed and the area wiped as soon as possible but at the very least, a minimum of once per day. Always thoroughly rinse surfaces after using a cleaning agent and wipe standing water as quickly as possible after rinsing.

## Cleaning Agents

Use non-abrasive cleaning products designed for use on stainless steel surfaces. Cleaning agents must be chloride-free compounds and must not contain quaternary salts. Never use hydrochloric acid (muriatic acid) on stainless steel surfaces. Failure to observe this precaution will void the warranty. Always use the proper cleaning agent at the manufacturer's recommended strength. Contact your local cleaning supplier for product recommendations.

## Cleaning Materials

Cleaning can usually be accomplished with the proper cleaning agent and a soft, clean cloth. When more aggressive methods are needed, use a non-abrasive scouring pad on difficult areas and make certain to scrub with the visible grain of surface metal to avoid surface scratches. Never use wire brushes, metal scouring pads, or scrapers to remove food residue. Failure to observe this precaution will void the warranty.

## NOTICE

To protect stainless steel surfaces, completely avoid the use of abrasive cleaning compounds, chloride based cleaners, or cleaners containing quaternary salts. **Never** use hydrochloric acid (muriatic acid) on stainless steel. **Never** use wire brushes, metal scouring pads or scrapers.

## ⚠WARNING

To prevent **serious personal injury**, **death**, or **property damage**:

The appliance must be cleaned thoroughly to avoid deposits of grease and or food residue inside the appliance that may catch fire. If fat deposits and/or food waste inside the appliance ignite, shut down the appliance immediately and keep the appliance door closed to extinguish the fire. If further extinguishing is required, disconnect the appliance from the main power and use a fire extinguisher (do not use water to extinguish a grease fire!). Failure to clean the appliance properly invalidates the warranty and relieves Alto-Shaam of all liability.

## ⚠ WARNING

To prevent serious personal injury, death, or property damage:

**Do not** steam clean, hose down or flood the interior or exterior with water or liquid solution of any kind. **Do not** use water jet to clean. Failure to observe this precaution will void the warranty.

## ⚠ WARNING

To prevent serious injury, death, or property damage, **always** disconnect the appliance from the power source before cleaning or servicing.

### Daily cleaning

1. Disconnect unit from power source, and let cool.
2. Remove all detachable items such as wire shelves, side racks, and drip pans. Clean these items separately.
3. Wipe the interior metal surfaces of the oven with a paper towel to remove loose food debris.
4. Clean the interior metal surfaces, door vents, and front drip tray with a damp clean cloth or sponge and any good commercial detergent.

***NOTICE*:** Never use of abrasive cleaning compounds, chloride based cleaners, or cleaners containing quaternary salts. Never use hydrochloric acid (muriatic acid) on stainless steel.

5. Spray heavily soiled areas with a water soluble degreaser and let stand for 10 minutes, then remove soil with a plastic scouring pad.
6. Wipe control panel, door vents, door handles, and door gaskets thoroughly since these areas harbor food debris.
7. Rinse surfaces by wiping with sponge and clean warm water.
8. Remove excess water with sponge and wipe dry with a clean cloth or air dry. Leave doors open until interior is completely dry. Replace side racks and shelves.
9. Wipe door gaskets and control panel dry with a clean, soft cloth.
10. Interior can be wiped with a sanitizing solution after cleaning and rinsing. This solution must be approved for use on stainless steel food contact surfaces.
11. To help maintain the protective film coating on polished stainless steel, clean the exterior of the cabinet with a cleaner recommended for stainless steel surfaces. Spray the cleaning agent on a clean cloth and wipe with the grain of the stainless steel.
12. Clean any glass with a window cleaner.

Always follow appropriate state or local health (hygiene) regulations regarding all applicable cleaning and sanitation requirements for equipment.

### Clean the probes daily

Remove all food soil from probes. Wipe entire probe and cable assembly with warm detergent solution and a clean cloth. Remove detergent by wiping each probe and cable with clean rinse water and a cloth. Wipe probes, and probe brackets with disposable alcohol pad or sanitizing solution recommended for food contact surfaces. Allow probe and cable to air dry in probe holding bracket.

### Check the cooling fan in the oven control area

While the oven is warm, check that the cooling fan in the oven control area is functioning. The fan is located at the back of the unit, toward the top.

### Check overall condition of oven once a month

Check the oven once a month for physical damage and loose screws. Correct any problems before they begin to interfere with the operation of the oven.

### Do not use oven if controls are not properly functioning.

Refer to the Trouble Shooting Guide located in this manual or call an authorized service technician.

### Clean the probe prongs daily

To ensure accurate internal product temperature readings the prongs on the removable probe must be cleaned daily.

1. Remove all food debris from prongs at the end of each production shift. Wipe the entire prong casing, and between each prong with a clean cloth and warm detergent solution.
2. Remove detergent by wiping with a cloth and clean rinse water.
3. Allow prongs to air dry before replacing detachable probe.

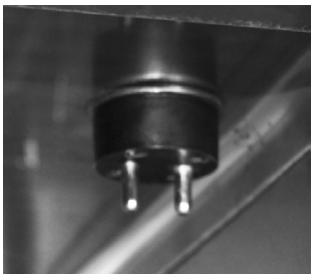

### Daily

- □ Perform daily oven cleaning as stated in this guide.
- □ Clean front drip tray as recommended in this guide.

### Monthly

- □ Inspect the door gasket for signs of cracking, deformation, or damage and replace as needed.
- □ Inspect the door window gasket for proper seal.
- □ Inspect the cavity door vent slides for proper operation.
- □ Inspect the side racks, shelves and shelf supports for damage and replace as needed.
- □ Calibrate removable product probe (if applicable).
- □ Clean the cooling fan intake area and exhaust vents.
- □ Visually inspect the smoke element (if applicable). If any visual signs of deformation, cracks or breaks are seen, remove the oven from service and contact a factory authorized service technician for service.

### Every 12 months (Inspection by a factory authorized technician)

- □ Open the control area and inspect and tighten all electrical connections.
- □ Inspect all electrical components.
- □ Inspect the smoke element and smoke element wiring (if applicable).
- □ Visually inspect the smoke element (if applicable). If any visual signs of deformation, cracks or breaks are seen, remove the oven from service and contact a factory authorized service technician for service.
- □ Confirm proper current draw of heating elements.
- □ Test heating elements for electrical short to ground. Replace/repair as needed.
- □ Inspect the condition of the plug and cord and replace if damaged.
- □ Tighten the cord connection inside the appliance control area.
- □ Test/replace independent indicator lights (where applicable).
- □ Replace the control cooling fans (if applicable).
- □ Check the site voltage.
- □ Set the voltage switch (where applicable).
- □ Inspect and test the product probe and product probe receptacle.
- □ Inspect and test the control and control functions.
- □ Replace the control knobs.
- □ Visually inspect the cavity for structural integrity.
- □ Replace the door gasket.
- □ Visually inspect any door handles and hinges. Replace/repair as needed.
- □ Remove any loose handle and hinge screws. Apply Loctite® and then properly secure the screws.
- □ Inspect the perimeter bumper. Repair/replace as needed.
- □ Inspect the casters. Repair/replace as needed.
- □ Perform cavity temperature calibration per manufacturer's recommended calibration procedures.

# Food Safety

Food flavor and aroma are usually so closely related that it is difficult, if not impossible, to separate them. There is also an important, inseparable relationship between cleanliness and food flavor. Cleanliness, operating efficiency, and appearance of equipment contribute considerably to savory, appetizing foods.

Most food imparts its own particular aroma and many foods also absorb existing odors. Unfortunately, during this absorption there is not a distinction between **good** and **bad** odors. The majority of objectionable flavors and odors troubling food service operations are caused by bacteria growth. Sourness, rancidity, mustiness, stale or other undesireable flavors are usually the result of germ activity.

The easiest way to ensure full, natural food flavor is through comprehensive cleanliness. This means good control of both visible soil (dirt) and invisible soil (germs). A thorough approach to sanitation will provide essential cleanliness. It will ensure an attractive appearance of equipment, along with maximum efficiency and utility. More importantly, a good sanitation program provides one of the key elements in the prevention of food-borne illnesses.

A comprehensive sanitation program should focus on the training of staff in basic sanitation procedures. This includes personal hygiene, proper handling of raw foods, cooking to a safe internal product temperature, and the routine monitoring of internal food temperatures from the time the food is received through the time the food is served.

A controlled holding environment for prepared foods is just one of the important factors involved in the prevention of food-borne illnesses. Temperature monitoring and control during receiving, storage, preparation, and the service of foods are of equal importance.

The most accurate method of measuring safe temperatures of both hot and cold foods is by internal product temperature. A thermometer is an effective tool for this purpose, and should be routinely used on all products that require holding at a specific temperature.

| Internal Food Product Temperatures | | |
|---|---|---|
| **Hot Foods** | | |
| Danger Zone | 40°F to 140°F | 4°C to 60°C |
| Critical Zone | 70°F to 120°F | 21°C to 49°C |
| Safe Zone | 140°F to 165°F | 60°C to 74°C |
| **Cold Foods** | | |
| Danger Zone | Above 40°F | Above 4°C |
| Safe Zone | 36°F to 40°F | 2°C to 4°C |
| **Frozen Foods** | | |
| Danger Zone | Above 32°F | Above 0°C |
| Critical Zone | 0°F to 32°F | -18°C to 0°C |
| Safe Zone | 0°F or Below | -18°C or Below |

Hazard Analysis (at) Critical Control Points (HACCP), is a quality control program of operating procedures to assure food integrity, quality, and safety. Taking steps necessary to augment food safety practices is both cost effective and relatively simple. Additional HACCP information is available by contacting:

Center for Food Safety and Applied Nutrition
Food and Drug Administration
Phone: 1-888-SAFEFOOD
www.foodsafety.gov

| Code | Description | Possible Causes |
|---|---|---|
| **E-10** | **Cavity air sensor shorted** | Cavity air sensor reading < 5°F (-15°C). Verify sensor integrity. |
| **E-11** | **Cavity air sensor open** | Cavity air sensor reading > 517°F (269°C). Verify sensor integrity. |
| **E-20** | **Product probe is shorted** *Oven will cook in time only* | Product probe reading < 5°F (-15°C). Verify sensor integrity. |
| **E-21** | **Product probe is open** *Oven will cook in time only* | Product Probe reading > 517°F (269°C). Verify sensor integrity. |
| **E-30** | **Under temperature** | Unit has been more than 25°F (14°C) below set point for longer than 90 minutes. |
| **E-31** | **Over temperature** | Unit has been more than 60°F (33°C) above the maximum set-point for longer than 3 minutes. Holding Cabinets with this error code are more than 145°F (81°C) above the maximum set-point. |
| **E-32** | **Safety switch open (Aux hi-limit switch)** | Contact factory. |
| **E-38** | **Internal software error** | Contact factory. |
| **E-39** | **Sensor error** | Contact factory. |
| **E-50** | **Temp. measurement error** | Contact factory. |
| **E-51** | **Temp. measurement error** | Contact factory. |
| **E-60** | **Real time clock error** | Data set to factory default. Ensure that date and time are correct if applicable. |
| **E-61** | **Real time clock error** | Contact factory. |
| **E-64** | **Clock is not oscillating** | Contact factory. |
| **E-70** | **Configuration connector error (DIP switch)** | Refer to wiring diagram for the particular model and ensure dip switches on the control match the settings called out on the WD. If the dip switch settings are correct according to the print replace the control. |
| **E-78** | **Voltage low** | Voltage below 90 VAC on a 125 VAC unit, or below 190 VAC on a 208-240 VAC unit. Correct voltage. |
| **E-79** | **Voltage high** | Voltage over 135 VAC on a 125 VAC unit, or over 250 VAC on a 208-240 VAC unit. Correct voltage. |
| **E-80** | **EEPROM Error** | Ensure that all temperatures and times are properly set. Contact factory if problem persists. |
| **E-81** | **EEPROM Error** | Contact factory. |
| **E-82** | **EEPROM Error** | Contact factory. |
| **E-83** | **EEPROM Error** | Contact factory. |
| **E-85** | **EEPROM Error** | All timers, if previously on, are now off. Possible bad EEPROM. |
| **E-86** | **EEPROM Error** | Stored HACCP memory corrupted. HACCP Address reset to 1. Possible bad EEPROM. Contact factory if problem persists. |
| **E-87** | **EEPROM Error** | Stored offsets corrupted. Offsets reset to 0. Control may need a recalibration. Possible bad EEPROM. Contact factory if problem persists. |
| **E-88** | **EEPROM Error** | All timer set-points are reset to 1 minute. Timers, if previously on, are now off. Possible bad EEPROM. |
| **E-90** | **Button stuck** | A button has been held down for > 60 seconds. Adjust control. Error will reset when the problem has been resolved. |
| **E-91** | **Input failure** | Contact factory. |
| **E-dS** | **Datakey error** | Datakey digital signature incompatible. Cycle power, and install compatible Datakey if error persists. |
| **E-dT** | **Datakey error** | Datakey incompatible with control. Install compatible Datakey. |
| **E-dU** | **Datakey unplugged** | Install Datakey and cycle power to control to clear error. |
| **dLto** | **Datalogger has timed out** | Cycle power. Contact factory if error persists. |
| **dLSD** | **Micro SD card not plugged in** | Plug in SD card and cycle power. Contact factory if error persists. |
| ***NOTE:*** If in doubt, always cycle the power to the control and contact factory if the problem persists. | | |

**⚠ WARNING**

To prevent serious injury, death, or property damage, **always** disconnect the appliance from the power source before cleaning or servicing.

**⚠ DANGER**

To prevent serious injury, death, or property damage, **always** lock-out or post breaker panel until service work has been completed.

ALWAYS check the circuit breaker is turned "ON" and your unit is receiving power BEFORE calling your Authorized Alto-Shaam Service Agent.

**NOTICE**

This section is provided for the assistance of qualified and trained service technicians only and is not intended for use by untrained or unauthorized service personnel. Do not attempt to repair or service the oven beyond this point. Contact Alto-Shaam for the nearest authorized service agent. Repairs made by any other service agents without prior authorization by Alto-Shaam will void the warranty.

## Troubleshooting

### A. No power. Display will not light.

1. Verify that power is available at the outlet or junction box.
2. Verify that the circuit breaker switch on the back of the unit is turned on.
3. Verify that the power cord is not open. Check continuity with a VOM meter.
4. If the problem persists, call a qualified Alto-Shaam service technician at 1-800-558-8744.

### B. Display is lit but unit is not heating.

Check to verify that the high limit switch located at the rear of the unit top has not been tripped. If it has been tripped, reset by pressing in the hi-limit reset button at the rear of the appliance.

After resetting, the cause of the high limit trip must be corrected. If the high limit switch will not reset, the high limit switch is defective and must be replaced. ***This is a safety device and must not be bypassed or removed from the circuit.***

**NOTICE**

**If the appliance has been unplugged for an extended period of time, the Real Time Clock may require recharging. Turn main breaker to the unit off for 10 seconds and then restore power. For more information, see Error Code E-60 in the Troubleshooting section of this manual.**

### How to verify sensor integrity

Place the sensor in ice water. Test with an ohmmeter set to the ohm scale.

| | |
|---|---|
| Product probe | 100 ohms ± 2 |
| Product probe, 300-TH-III | 1000 ohms ± 20 |
| Air sensor | 100 ohms ± 2 |

If the reading is more or less than above parameters, replace sensor.

## Exterior Service View - 300-TH-III

A

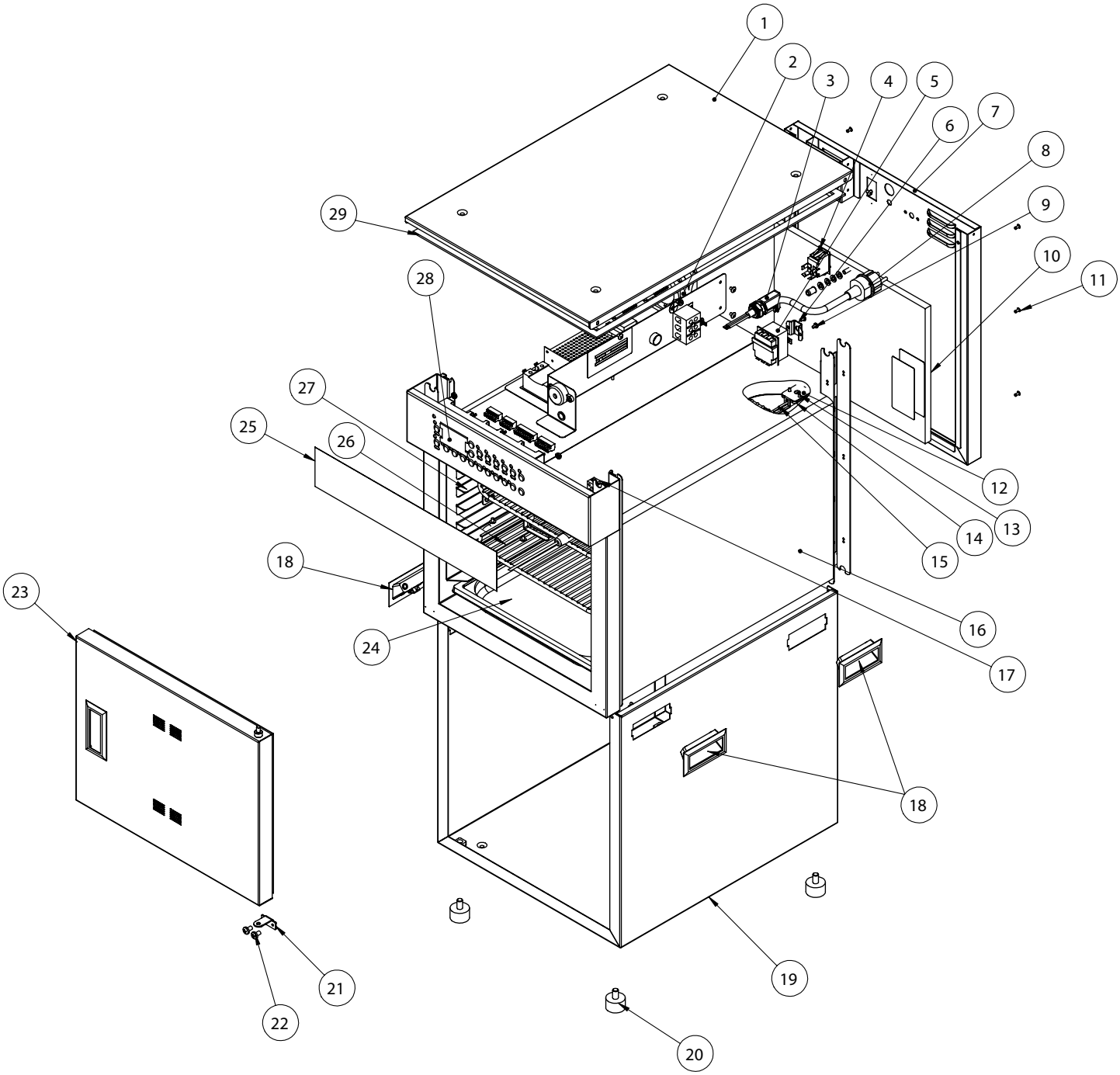


Part numbers and drawings are subject to change without notice.

## Exterior Parts List - 300-TH-III (A)

| ITEM | DESCRIPTION | PART NO. | QTY |
|---|---|---|---|
| 1 | BONNET TOP COVER | 1012831 | 1 |
| 2 | FAN BOX, 120V | FA-3973 | 1 |
| | FAN BOX, 230V | FA-34524 | 1 |
| 3 | BUSHING, STRAIGHT, STRAIN RELIEF, 230V | BU-34898 | 1 |
| | BUSHING, STRAIGHT, STRAIN RELIEF, 120V | BU-3964 | 1 |
| 4 | SWITCH, ROCKER, 125-277V, 20A | SW-34769 | 1 |
| 5 | HI-LIMIT THERMOSTAT | TT-33476 | 1 |
| 6 | HI-LIMIT PROTECTION COVER | 1003936 | 1 |
| 7 | REAR TRIM | 5014525 | 1 |
| 8 | CORDSET | SEE ELEC VIEW | |
| 9 | SCREWS, M4-0.7 x 6mm PHIL | SC-22271 | 2 |
| 10 | INSULATION | IN-2003 | 1 |
| 11 | RIVET, BLIND, #44, S/S | RI-2100 | 16 |
| 12 | GUARD SENSOR | 1493 | 1 |
| 13 | SCREW, 6-32 x 1/2, NC PHIL, FLAT | SC-2254 | 2 |
| 14 | BLOCK, SENSOR | BK-29605 | 1 |
| 15 | SENSOR | SN-38110 | 1 |
| 16 | INSULATION | IN-22364 | 1 |
| 17 | PRODUCT PROBE | 15892R | 1 |
| 18 | HANDLE, PULL, RECESSED | HD-28789 | 4 |
| 19 | OUTER CASING SPOT | 5014538 | 1 |
| 20 | FEET, 3-1/2" (89mm) RIGID | FE-29203 | 4 |
| 21 | HINGE PLATE, BOTTOM RIGHT | 5021070 | 1 |
| | LEFT* | 5022273 | 1 |
| 22 | SCREW, M6 x 1.0 x 10 PAN | SC-27078 | 2 |
| 23 | DOOR ASSEMBLY | 5014458 | 1 |
| | DOOR GASKET | GS-35092 | 1 |
| 24 | DRIP PAN | PN-2122 | 1 |
| 25 | PANEL, OVERLAY | PE-35086 | 1 |
| 26 | SHELF, WIRE | SH-2107 | 2 |
| 27 | SIDE RACK | 1012872 | 2 |
| 28 | CONTROL | CC-34194 | 1 |
| 29 | GASKET, ADHESIVE,.125 x .375 [lin ft] | GS-23622 | 1 |
| 30* | PROBE WIRE HOLDER | 1017495 | 1 |
| 31* | NUT, THREADED INSERT, M6 | NU-22770 | 1 |
| 32* | NUT, 8-32 UNC FEPS ZP | NU-26526 | 4 |
| 33* | SCREW, 8-32 x 2 SLOT PAN HEAD 18-8 S/S | SC-23154 | 2 |
| 34* | SCREW, HHCS M6 x 20, W/NO MARKING | SC-22924 | 1 |
| 35* | SCREW, 8-32 x 1/4" TRH PHH | SC-2459 | 12 |
| 36* | FOIL PAD HEATER, 230V | EL-29740 | 1 |
| | FOIL PAD HEATER, 120V | EL-35173 | 1 |

* NOT SHOWN

## Exterior Service View - 500, 750, 1000-TH-III (B)

### 500-TH-III Shown

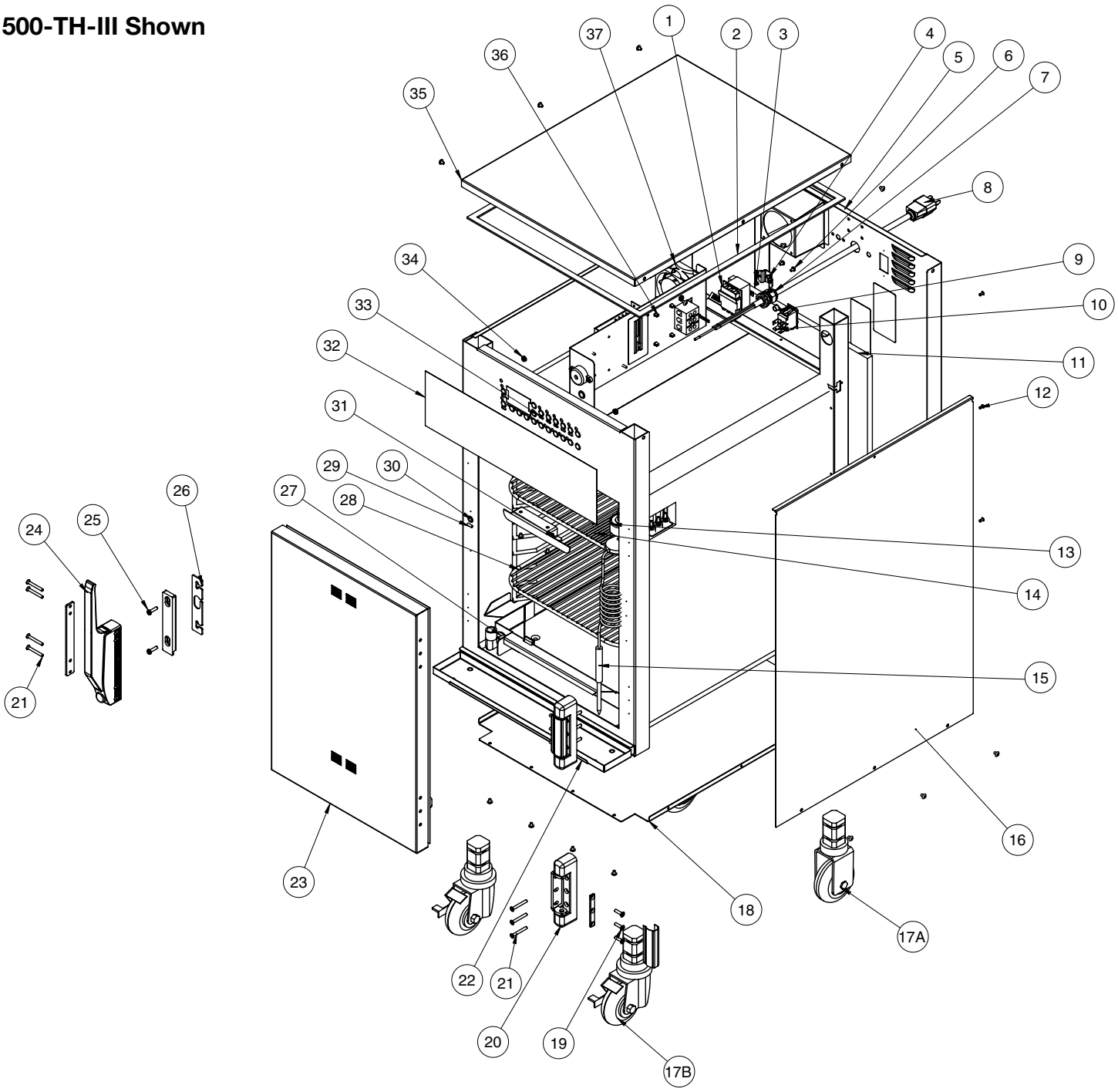


Part numbers and drawings are subject to change without notice.

**⚠ WARNING**

To prevent serious injury, death, or property damage, **always** disconnect the appliance from the power source before cleaning or servicing.

**⚠ DANGER**

To prevent serious injury, death, or property damage, **always** lock-out or post breaker panel until service work has been completed.

# Exterior Parts List - 500, 750, 1000-TH-III

B

| * NOT SHOWN MODEL > | | 500-TH-III | | 750-TH-III | | 1000-TH-III | |
|---|---|---|---|---|---|---|---|
| ITEM | DESCRIPTION | PART NO. | QTY | PART NO. | QTY | PART NO. | QTY |
| 1 | THERMOSTAT, HI LIMIT | TT-33476 | 1 | TT-33476 | 1 | TT-33476 | 1 |
| 2 | GASKET ADHESIVE 0.125 x 0.375 [LIN FT] | GS-23622 | 1 | GS-23622 | 1 | GS-23622 | 1 |
| 3 | PLUG, DOME, .187" HOLE | PG-28439 | 4 | PG-28439 | 4 | PG-28439 | 4 |
| 4 | HIGH LIMIT PROTECTION COVER | 1003936 | 1 | 1003936 | 1 | 1003936 | 1 |
| 5 | REAR TRIM, SPOT | 5014004 | 1 | 5014081 | 1 | 5014172 | 1 |
| 6 | SCREW, M4-0.7 x 6mm PHIL | SC-22271 | 2 | SC-22271 | 2 | SC-22271 | 2 |
| 7 | BUSHING, STRAIN RELIEF | BU-3964 | 1 | BU-3964 | 1 | BU-3964 | 1 |
| 8 | CORDSET | SEE ELEC VIEW | | SEE ELEC VIEW | | SEE ELEC VIEW | |
| 9 | PLUG, 3/8" HOLE | PG-25574 | 1 | PG-25574 | 1 | PG-25574 | 1 |
| 10 | SWITCH,ROCKER, 125-277V, 20A | SW-34769 | 1 | SW-34769 | 1 | SW-34769 | 1 |
| 11 | INSULATION | IN-2003 | 1 | IN-2003 | 1 | IN-2003 | 1 |
| 12 | RIVET, BLIND, #44 STAINLESS | RI-2100 | 6 | RI-2100 | 6 | RI-2100 | 6 |
| 13 | PROBE RECEPTACLE | PR-34705 | 1 | PR-34705 | 1 | PR-34705 | 1 |
| 14 | SHELF, STAINLESS STEEL | SH-2326 | 2 | SH-2324 | 3 | SH-2325 | 3 |
| 15 | PROBE, PRODUCT | PR-36065 | 1 | PR-36065 | 1 | PR-36065 | 1 |
| | PROBE, PRODUCT (UK 230V ONLY) | — | — | — | — | PR-34298 | 1 |
| 16 | PANEL, SIDE | 5015081 | 2 | 5015083 | 2 | 5015088 | 2 |
| 17 | CASTER PACKAGE | 5008022 | 1 | 5008022 | 1 | 5014422 | 1 |
| 17A | - CASTER, 3-1/2" (89mm) RIGID | — | — | — | — | CS-25674 | 2 |
| | - CASTER, 2-1/2" (64mm) RIGID | CS-28178 | 2 | CS-28178 | 2 | — | — |
| 17B | - CASTER, 3-1/2" (89mm) SWIVEL W/ BRAKE | — | — | — | — | CS-25675 | 2 |
| | - CASTER, 2-1/2" (64mm) SWIVEL W/ BRAKE | CS-28179 | 2 | CS-28179 | 2 | — | — |
| 17C* | - SHIM | — | — | — | — | 1012735 | 4 |
| 18 | BOTTOM PANEL | 1010774 | 1 | 1010394 | 1 | 1009941 | 1 |
| 19 | SCREW, 10-32 x 3/4", NF PHIL | SC-2072 | 6 | SC-2072 | 6 | SC-2072 | 6 |
| 20 | HINGE | HG-22338 | 1 | HG-22338 | 1 | HG-22338 | 1 |
| 21 | SCREW,10-32 x 1-1/2", NF, PHIL | SC-2073 | 10 | SC-2073 | 10 | SC-2073 | 10 |
| 22 | DRIP TRAY KIT | 5010736 | 1 | 5010391 | 1 | 5009716 | 1 |
| | - DRIP TRAY HOLDER | 1010782 | 1 | 1010584 | 1 | 1010188 | 1 |
| | - DRIP TRAY | 1010783 | 1 | 1010585 | 1 | 1010189 | 1 |
| 23 | DOOR ASSEMBLY, SLAB, RH | 5010828 | 1 | 5010946 | 1 | 5010081 | 1 |
| | *DOOR ASSEMBLY, WINDOW, RH | 5010830 | 1 | 5010948 | 1 | 5010082 | 1 |
| | *DOOR ASSEMBLY, SLAB, LH | 5010824 | 1 | 5010947 | 1 | 5010071 | 1 |
| | *DOOR ASSEMBLY, WINDOW, LH | 5010829 | 1 | 5010949 | 1 | 5010076 | 1 |
| | *DOOR GASKET | GS-22950 | 1 | GS-22951 | 1 | GS-22952 | 1 |
| 24 | HANDLE, OFFSET MAG. LATCH | HD-27080 | 1 | HD-27080 | 1 | HD-27080 | 1 |
| 25 | SCREW, 3/4" PAN HD | SC-2071 | 2 | SC-2071 | 2 | SC-2071 | 2 |
| 26 | SHIM, HANDLE | 13947 | 1 | 13947 | 1 | 13947 | 1 |
| 27 | DRIP PAN WELD | 14813 | 1 | 14831 | 1 | 5005616 | 1 |
| 28 | SIDE RACK, CHROME | SR-28403 | 2 | SR-28405 | 2 | SR-2266 | 2 |
| | PAN SLIDES, 230V ONLY | 1010880 | 2 | 1010813 | 2 | — | — |
| 29 | REED SWITCH, DOOR (QTY PER DOOR) | SW-33559 | 1 | SW-33559 | 1 | SW-33559 | 1 |
| 30 | BUSHING, 3/8" BLACK HOLE | BU-3419 | 1 | BU-3419 | 1 | BU-3419 | 1 |
| 31 | PROBE WIRE HOLDER | 1017495 | 1 | 1017495 | 1 | 1017495 | 1 |
| 32 | PANEL OVERLAY | PE-26710 | 1 | PE-26839 | 1 | PE-26713 | 1 |
| 33 | CONTROL | CC-34194 | 1 | CC-34194 | 1 | CC-34194 | 1 |
| 34 | NUT, #8-32 UNC KEPS ZP | NU-26526 | 4 | NU-26526 | 4 | NU-26526 | 4 |
| 35 | TOP COVER | 1011946 | 1 | 1011872 | 1 | 1011534 | 1 |
| 36 | SCREW, 8-32 x 2 SLOT PAN HEAD 18-8 S/S | SC-23154 | 2 | SC-23154 | 2 | SC-23154 | 2 |
| 37 | FAN, BOX - 120V ONLY | FA-3973 | 1 | FA-3973 | 1 | FA-3973 | 1 |
| | FAN, BOX | FA-34524 | 1 | FA-34524 | 1 | FA-34524 | 1 |
| 38* | SENSOR GUARD | 1493 | 1 | 1493 | 1 | 1493 | 1 |
| 39* | PROBE COVER | 5009712 | 1 | 5009712 | 1 | 5009712 | 1 |
| 40* | SENSOR MOUNTING BLOCK | BK-29605 | 1 | BK-29605 | 1 | BK-29605 | 1 |
| 41* | SCREW, 6-32 x 1/2", NC PHIL, FLAT | SC-2254 | 2 | SC-2254 | 2 | SC-2254 | 2 |
| 42* | SCREW, 8-32 x 1/4" PHIL | SC-2459 | 18 | SC-2459 | 20 | SC-2459 | 26 |
| 43* | SCREW, 8-32 x 1/2" PHIL, S/S | SC-2425 | 6 | SC-2425 | 6 | SC-2425 | 6 |
| 44* | SENSOR, OVEN TEMPERATURE | SN-38110 | 1 | SN-38110 | 1 | SN-38110 | 1 |
| 46* | WASHER, FLAT, M6 DIN 125 | WS-22297 | 2 | WS-22297 | 2 | WS-22297 | 2 |
| 47* | WASHER, M6 SPLIT LOCK S/S 18-8 | WS-22302 | 2 | WS-22302 | 2 | WS-22302 | 2 |

## Exterior Service View - 767, 1000-SK-III ©

**767-SK-III 230V Shown**

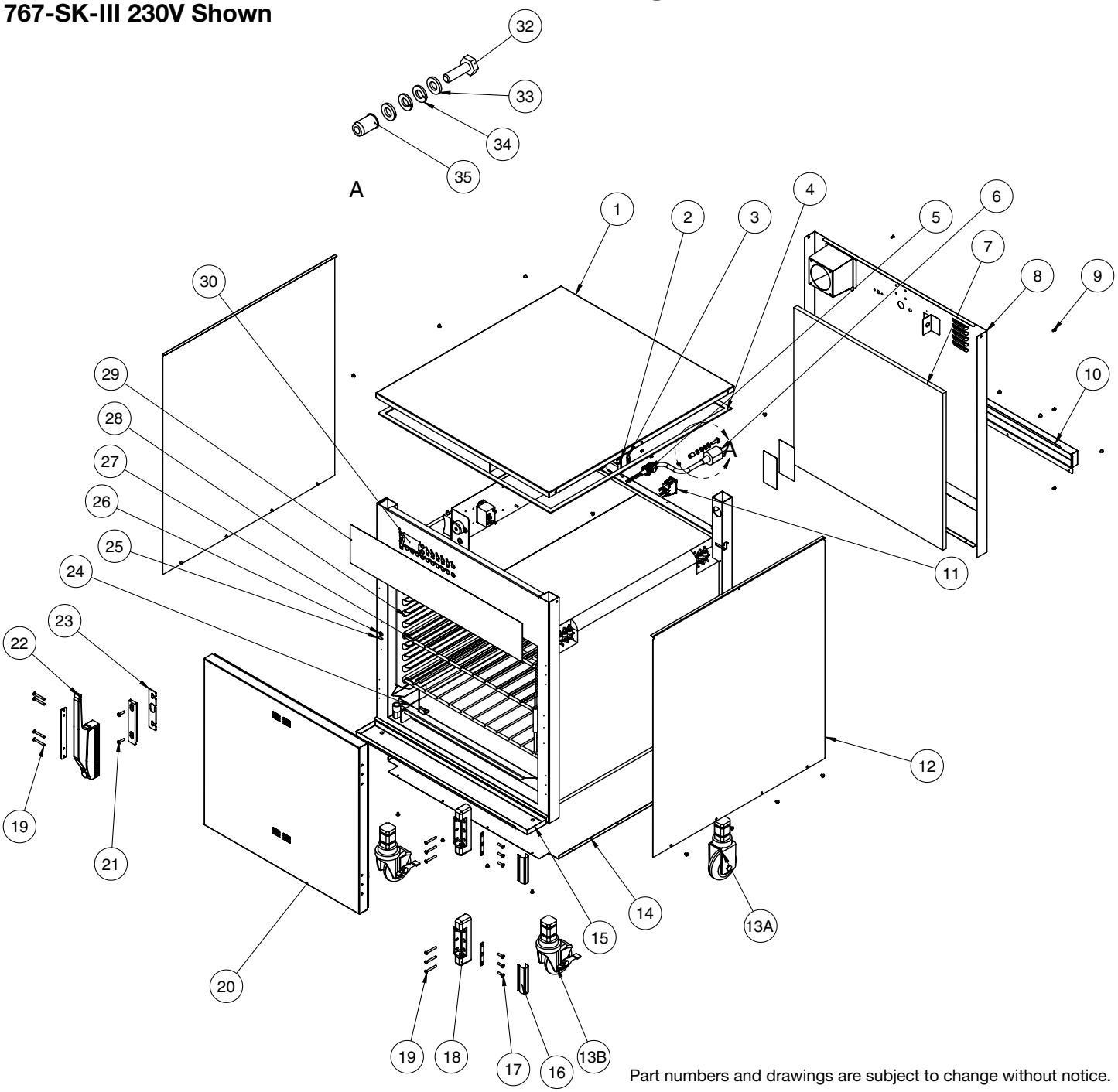


Part numbers and drawings are subject to change without notice.
** Shown with electrical chassis prior to 5/1/13

**⚠ WARNING**

To prevent serious injury, death, or property damage, **always** disconnect the appliance from the power source before cleaning or servicing.

**⚠ DANGER**

To prevent serious injury, death, or property damage, **always** lock-out or post breaker panel until service work has been completed.

# Exterior Parts List - 767, 1000-SK-III

Ⓒ

| * NOT SHOWN | MODEL > | 767-SK-III | | 1000-SK-III | |
|---|---|---|---|---|---|
| ITEM | DESCRIPTION | PART NO. | QTY | PART NO. | QTY |
| 1 | TOP COVER | 1011872 | 1 | 1011534 | 1 |
| 2 | THERMOSTAT, HI-LIMIT | TT-33476 | 1 | TT-33476 | 1 |
| 3 | HI-LIMIT PROTECTION COVER | 1003936 | 1 | 1003936 | 1 |
| 4 | GASKETS, ADHESIVE, 0.125 x 0.375 [linear ft] | GS-23622 | 1 | GS-23622 | 1 |
| 5 | BUSHING, STRAIGHT, STRAIN RELIEF | BU-3964 | 1 | BU-3964 | 1 |
| 6 | CORDSET | SEE ELEC VIEW | | SEE ELEC VIEW | |
| 7 | INSULATION | IN-2003 | 1 | IN-2003 | 1 |
| 8 | REAR TRIM, SPOT | 5014137 | 1 | 5014204 | 1 |
| 9 | RIVET, BLIND, #44, STAINLES STEEL | RI-2100 | 6 | RI-2100 | 6 |
| 10 | ELEMENT COVER | 1010409 | 1 | 1011813 | 1 |
| 11 | SWITCH, ROCKER, 20A | SW-34769 | 1 | SW-34769 | 1 |
| 12 | SIDE PANEL | 5015083 | 2 | 5015088 | 2 |
| 13 | CASTER PACKAGE | 5014422 | 1 | 5014422 | 1 |
| 13A | - CASTER, 1.5" STEM, RIGID 5" (127mm) | CS-24874 | 2 | CS-24874 | 2 |
| 13B | - CASTER, 1.5" STEM, 5" (127mm) SWIVEL W/ BRAKE | CS-24875 | 2 | CS-24875 | 2 |
| 13C* | - SHIM | 1012735 | 4 | 1012735 | 4 |
| 14 | BOTTOM PANEL | 1010394 | 1 | 1009941 | 1 |
| 15 | DRIP TRAY KIT | 5010391 | 1 | 5009716 | 1 |
| | — DRIP TRAY | 1010584 | 1 | 1010188 | 1 |
| | — DRIP TRAY HOLDER | 1010585 | 1 | 1010189 | 1 |
| 16 | HINGE COVER | CV-22171 | 2 | CV-22171 | 2 |
| 17 | SCREW, M5 x 0.8 x 20mm FLAT | SC-23868 | 6 | SC-23868 | 6 |
| 18 | HINGE, 1-3/8" OFFSET, PAIR, CHROME | HG-22338 | 1 | HG-22338 | 1 |
| 19 | SCREW, MS x 0.8 x 30mm FLAT | SC-22853 | 10 | SC-22853 | 10 |
| 20 | DOOR ASSEMBLY, RH | 5011828 | 1 | 5012859 | 1 |
| | *DOOR ASSEMBLY, LH | 5011829 | 1 | 5012861 | 1 |
| | *DOOR GASKET | GS-22951 | 1 | GS-22952 | 1 |
| 21 | SCREW, M5 x 0.8 x 20mm PAN | SC-22779 | 2 | SC-22779 | 2 |
| 22 | HANDLE, OFFSET MAGNETIC LATCH | HD-27080 | 1 | HD-27080 | 1 |
| 23 | SHIM, HANDLE | 13947 | 1 | 13947 | 1 |
| 24 | DRIP PAN WELD | 14831 | 1 | 5005616 | 1 |
| 25 | REED SWITCH, DOOR | SW-33559 | 1 | SW-33559 | 1 |
| 26 | BUSHING, 3/8" BLACK HOLE | BU-3419 | 1 | BU-3419 | 1 |
| 27 | SHELF, WIRE S/S | SH-2324 | 2 | SH-2325 | 2 |
| | *SHELF, RIB RACK | SH-2743 | 2 | SH-29474 | 1 |
| 28 | SIDE RACKS | SR-28405 | 2 | SR-2266 | 2 |
| | PAN SLIDES (230V ONLY) | 1010813 | 2 | — | — |
| 29 | PANEL OVERLAY | PE-27178 | 1 | PE-29385 | 1 |
| 30 | CONTROL | CC-34194 | 1 | CC-34194 | 1 |
| 31 | SCREW, HHCS, M6 X 20mm | SC-22924 | 1 | SC-22924 | 1 |
| 32 | WASHER, FLAT, M6, DIN 125 | WS-22297 | 2 | WS-22297 | 2 |
| 33 | WASHER, M6 SPLIT LOCK S/S 18-8 | WS-22302 | 2 | WS-22302 | 2 |
| 34 | NUT, #8-32 UNC KEPS ZP | NU-26526 | 4 | NU-26526 | 4 |
| 35* | SENSOR MOUNTING BLOCK | BK-24427 | 1 | BK-24427 | 1 |
| 36* | BRACKET, CHIP TRAY | BT-29217 | 1 | BT-29217 | 1 |
| 37* | BUSHING, 5/8" SNAP, BLACK | BU-3611 | 2 | BU-3611 | 2 |
| 38* | CHIP TRAY WELD | 4652 | 1 | 4652 | 1 |
| 39* | SMOKE ELEMENT - 208-240V, 230V | EL-38104 | 1 | EL-38104 | 1 |
| | SMOKE ELEMENT - 120V | EL-35023 | 1 | EL-35023 | 1 |
| 40* | FAN, BOX, 120V | FA-3973 | 1 | FA-3973 | 1 |
| | FAN BOX | FA-34524 | 1 | FA-34524 | 1 |
| | NUT, THREADED INSERT, M6 | NU-22770 | 1 | NU-22770 | 1 |
| 41* | NUT, 1/4-20 HEX S/S | NU-2437 | 2 | NU-2437 | 2 |
| 42* | PLUG, DOME, .187" HOLE | PG-28439 | 4 | PG-28439 | 4 |
| 43* | PROBE ASSEMBLY, PRODUCT | PR-36065 | 1 | PR-36065 | 1 |
| 44* | PROBE COVER | 5009712 | 1 | 5009712 | 1 |
| 45* | PROBE WIRE HOLDER | 1017495 | 1 | 1017495 | 1 |
| 46* | PROBE RECEPTICAL, PRODUCT | PR-34705 | 1 | PR-34705 | 1 |
| 47* | SCREW, 6-32 x 1/2, NC PHIL, FLAT | SC-2239 | 2 | SC-2239 | 2 |
| 48* | SCREW, M4-0.7 x 6mm PHIL | SC-22271 | 2 | SC-22271 | 2 |
| 49* | SCREW, M3 x 0.5 x 16mm PAN | SC-22270 | 6 | SC-22270 | 6 |
| 50* | SCREW, 8-32 x 2 SLOT PAN HEAD 18-8 S/S | SC-23154 | 2 | SC-23154 | 2 |
| 51* | SENSOR, CAVITY | SN-38110 | 1 | SN-38110 | 1 |
| 52* | SENSOR GUARD | 1493 | 1 | 1493 | 1 |
| 53* | SMOKE HEATER PLATE WELD | 5023426 | 1 | 5023426 | 1 |

## Exterior Service View - 1200-TH-III (D)

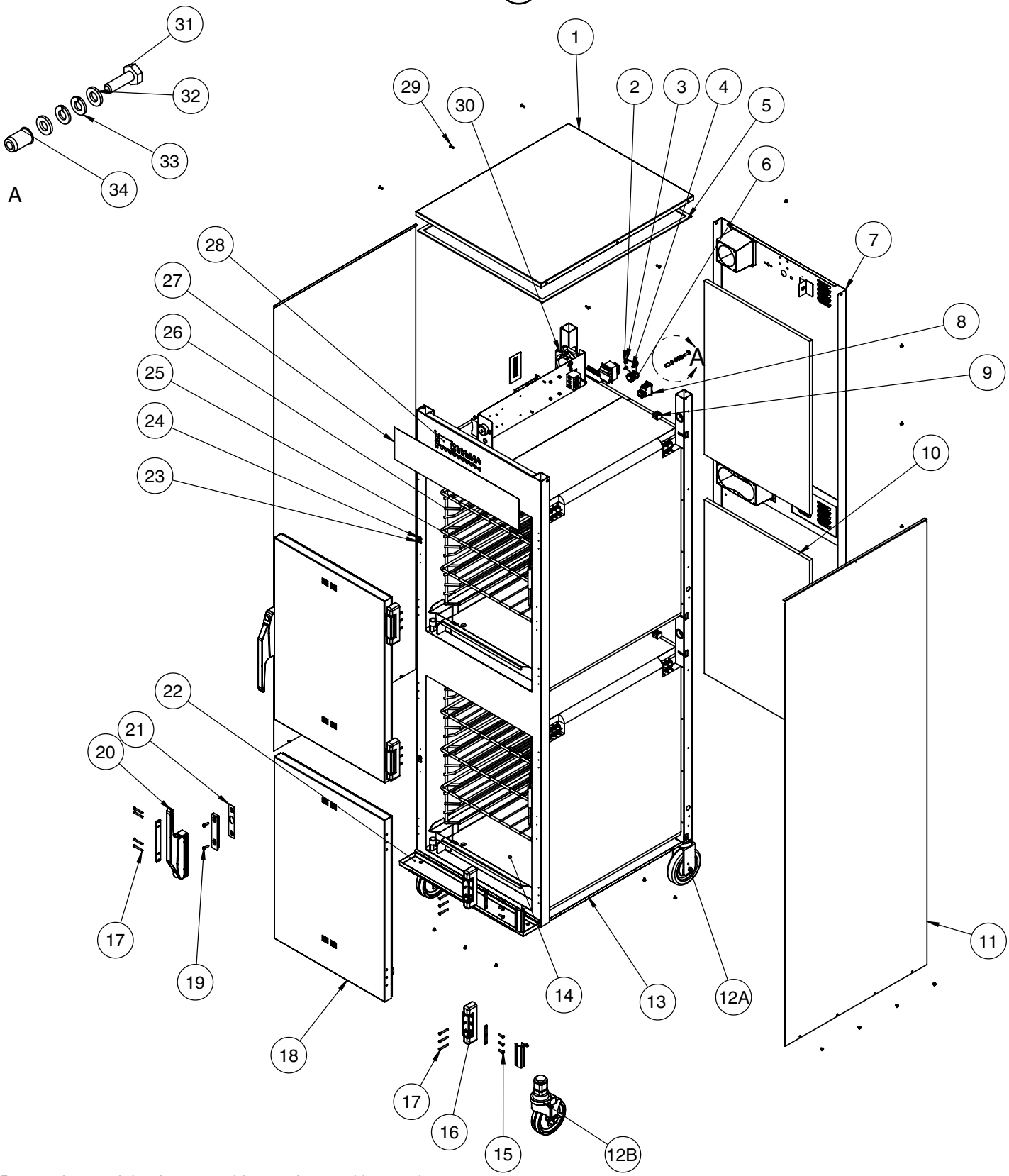


Part numbers and drawings are subject to change without notice.

** Shown with electrical chassis prior to 5/1/13

## Exterior Parts List - 1200-TH-III (D)

| ITEM | DESCRIPTION | PART NO. | QTY | ITEM | DESCRIPTION | PART NO. | QTY |
|---|---|---|---|---|---|---|---|
| 1 | TOP COVER | 1011534 | 1 | | - DRIP TRAY | 1010189 | 1 |
| 2 | SCREW, 10-32 x 1/2, NF PHIL, FLAT | SC-23670 | 4 | 23 | SWITCH, REED (QTY PER DOOR) | SW-33559 | 1 |
| 3 | NUT, 10-32 UNF HEX MS, 18-8 SST | NU-2215 | 4 | 24 | BUSHING, 3/8" BLACK HOLE | BU-3419 | 1 |
| 4 | BRACKET, TETHER | BT-26884 | 1 | 25 | SHELF, STAINLESS STEEL | SH-2325 | 6 |
| 5 | GASKET ADHESIVE 0.125 x 0.375 | GS-23622 | 1 | 26 | SIDE RACK, CHROME | SR-2266 | 4 |
| 6 | BUSHING, STRAIN RELIEF | BU-3964 | 1 | 27 | PANEL OVERLAY | PE-26714 | 1 |
| 7 | REAR TRIM, SPOT | 5014268 | 1 | 28 | CONTROL | CC-34194 | 1 |
| 8 | SWITCH, ROCKER,125-277V, 20A | SW-34769 | 1 | 29 | SCREW, 8-32 x 1/2" PHIL SCREW | SC-2425 | 6 |
| 9 | SENSOR MOUNTING BLOCK | BK-29605 | 1 | 30 | FAN, BOX | FA-34524 | 2 |
| 10 | INSULATION | IN-2003 | 2 | 31 | SCREW, HHCS, M6 x 20 | SC-22924 | 1 |
| 11 | PANEL, SIDE | 5015105 | 2 | 32 | WASHER, FLAT, M6 DIN 125 | WS-22297 | 2 |
| 12 | CASTER PACKAGE | 5014421 | 1 | 33 | WASHER, M6 SPLIT LOCK S/S 18-8 | WS-22302 | 2 |
| 12A | - CASTER, 5" (127mm) RIGID | CS-24874 | 2 | 34 | NUT, THREADED INSERT | NU-22770 | 1 |
| 12B | - CASTER, 5" (127mm) SWIVEL W/ BRAKE | CS-24875 | 2 | 35* | SENSOR GUARD | 1493 | 1 |
| 12C* | - SHIM | 1012735 | 4 | 36* | PROBE WIRE HOLDER | 1017495 | 1 |
| 13 | BOTTOM PANEL | 1009941 | 1 | 37* | HIGH LIMIT PROTECTION COVER | 1003936 | 1 |
| 14 | DRIP PAN WELD | 5005616 | 2 | 38* | PROBE COVER | 5009712 | 1 |
| 15 | SCREW,10-32 x 3/4", NF PHIL | SC-2072 | 12 | 39* | BUSHING, 1-1/8" SNAP BUSHING | BU-3378 | 8 |
| 16 | HINGE | HG-22338 | 2 | 40* | NUT, #8-32 UNC KEPS ZP | NU-26526 | 4 |
| | HINGE COVER | CV-22171 | 4 | 41* | PROBE, PRODUCT | PR-36065 | 1 |
| 17 | SCREW,10-32 x 1-1/2", NF, PHIL | SC-2073 | 20 | | PROBE, PRODUCT (UK 230V ONLY) | PR-34298 | 1 |
| 18 | DOOR ASSEMBLY, RH | 5010081 | 2 | 42* | PROBE RECEPTACLE, 2200mm WIRE | PR-34704 | 1 |
| | *DOOR ASSEMBLY, WIDOW, RH | 5010082 | 2 | 43* | PROBE RECEPTACLE, 600mm WIRE | PR-34705 | 1 |
| | *DOOR ASSEMBLY, LH | 5010071 | 2 | 44* | SCREW, M4-0.7 x 6mm PHIL | SC-22271 | 4 |
| | *DOOR ASSEMBLY, WINDOW, LH | 5010076 | 2 | 45* | SCREW, 6-32 x 1/2", NC PHIL, FLAT | SC-2254 | 4 |
| | *DOOR GASKET | GS-22952 | 2 | 46* | 8-32 x 2 SLOT PAN HEAD 18-8 S/S | SC-23154 | 4 |
| 19 | SCREW, 3/4" PAN HD | SC-2071 | 4 | 47* | SCREW, 8-32 x 1/4" PHIL | SC-2459 | 22 |
| 20 | HANDLE, OFFSET MAG. LATCH | HD-27080 | 2 | 48* | SENSOR, OVEN TEMPERATURE | SN-38110 | 2 |
| 21 | SHIM, HANDLE | 13947 | 1 | 49* | THERMOSTAT, HI LIMIT | TT-33476 | 2 |
| 22 | DRIP TRAY KIT | 5009716 | 1 | | | | |
| | - DRIP TRAY HOLDER | 1010188 | 1 | | | | |

**⚠ WARNING**

To prevent serious injury, death, or property damage, **always** disconnect the appliance from the power source before cleaning or servicing.

**⚠ DANGER**

To prevent serious injury, death, or property damage, **always** lock-out or post breaker panel until service work has been completed.

# Exterior Service View - 1200, 1767-SK-III (E)

## 1200-SK-III Shown

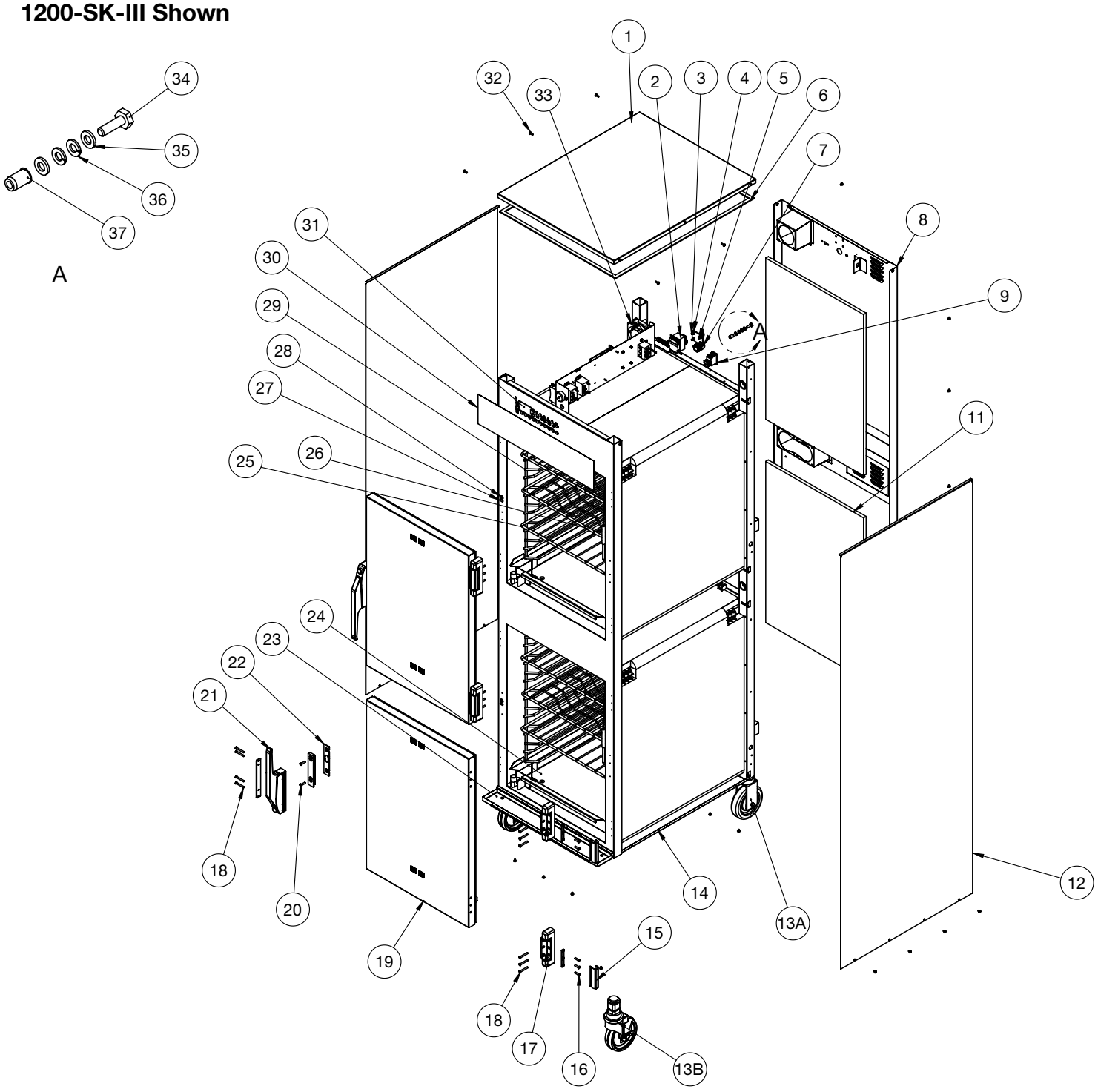


Part numbers and drawings are subject to change without notice.
** Shown with electrical chassis prior to 5/1/13

# Exterior Parts List - 1200, 1767-SK-III

Ⓔ

| | MODEL > | 1767-SK-III | | 1200-SK-III | |
|---|---|---|---|---|---|
| ITEM | DESCRIPTION | PART NO. | QTY | PART NO. | QTY |
| 1 | TOP COVER | 1011872 | 1 | 1011534 | 1 |
| 2 | THERMOSTAT, HI-LIMIT | TT-33476 | 2 | TT-33476 | 2 |
| 3 | SCREW, M5 x 0.8 x 16mm FLAT | SC-22281 | 4 | SC-22281 | 4 |
| 4 | NUT, CT, M5-0.8 HEX, 18-8 | NU-22289 | 4 | NU-22289 | 4 |
| 5 | HI-LIMIT PROTECTION COVER | 1003936 | 2 | 1003936 | 2 |
| 6 | GASKET, ADHESIVE, 0.125 x 0.375 [linear ft] | GS-23622 | 1 | GS-23622 | 1 |
| 7 | BRACKET, TETHER | BT-26884 | 1 | BT-26884 | 1 |
| 8 | REAR TRIM, SPOT | 5014223 | 1 | 5014293 | 1 |
| 9 | SWITCH, ROCKER, 20A | SW-34769 | 1 | SW-34769 | 1 |
| 10 | BLANK | — | — | — | — |
| 11 | INSULATION | IN-2003 | 2 | IN-2003 | 2 |
| 12 | SIDE PANEL | 5015102 | 2 | 5015105 | 2 |
| 13 | CASTER PACKAGE | 5014421 | 1 | 5014421 | 1 |
| 13A | - CASTER, 1.5" STEM, RIGID 5" (127mm) | CS-24874 | 2 | CS-24874 | 2 |
| 13B | - CASTER, 1.5" STEM, 5" (127mm) SWIVEL W/ BRAKE | CS-24875 | 2 | CS-24875 | 2 |
| 13C* | - SHIM | 1012735 | 4 | 1012735 | 4 |
| 14 | BOTTOM PANEL | 1010394 | 1 | 1009941 | 1 |
| 15 | HINGE COVER | CV-22171 | 4 | CV-22171 | 4 |
| 16 | SCREW, M5 x 0.8 x 20mm FLAT | SC-23868 | 12 | SC-23868 | 12 |
| 17 | HINGE, 1-3/8" OFFSET, PAIR, CHROME | HG-22338 | 2 | HG-22338 | 2 |
| 18 | SCREW, MS x 0.8 x 30mm FLAT | SC-22853 | 20 | SC-22853 | 20 |
| 19 | DOOR ASSEMBLY, RH | 5011828 | 2 | 5012859 | 2 |
| | *DOOR ASSEMBLY, LH | 5011829 | 2 | 5012861 | 2 |
| | *DOOR GASKET | GS-22951 | 2 | GS-22952 | 2 |
| 20 | SCREW, M5 x 0.8 x 20mm PAN | SC-22779 | 4 | SC-22779 | 4 |
| 21 | HANDLE, OFFSET MAGNETIC LATCH | HD-27080 | 2 | HD-27080 | 2 |
| 22 | SHIM, HANDLE | 13947 | 2 | 13947 | 2 |
| 23 | DRIP TRAY KIT | 5010391 | 1 | 5009716 | 1 |
| | - DRIP TRAY | 1010584 | 1 | 1010188 | 1 |
| | - DRIP TRAY HOLDER | 1010585 | 1 | 1010189 | 1 |
| 24 | DRIP PAN WELD | 14831 | 2 | 5005616 | 2 |
| 25 | SHELF, WIRE S/S | SH-2324 | 4 | SH-2325 | 4 |
| 26 | SHELF, RIB RACK | SH-2743 | 2 | SH-29474 | 2 |
| 27 | REED SWITCH, DOOR | SW-33559 | 2 | SW-33559 | 2 |
| 28 | BUSHING, 3/8" BLACK HOLE | BU-3419 | 2 | BU-3419 | 2 |
| 29 | SIDE RACKS | SR-28405 | 4 | SR-2266 | 4 |
| | PAN SLIDES (230V ONLY) | 1010813 | 4 | — | — |
| 30 | PANEL OVERLAY | PE-27181 | 1 | PE-29386 | 1 |
| 31 | CONTROL | CC-34194 | 1 | CC-34194 | 1 |
| 32 | RIVET, BLIND, #44, STNLS | RI-2100 | 12 | RI-2100 | 12 |
| 33 | FAN BOX | FA-34524 | 2 | FA-34524 | 2 |
| 34 | SCREW, HHCS, M6 x 20 | SC-22924 | 1 | SC-22924 | 1 |
| 35 | WASHER, FLAT, M6, DIN 125 | WS-22297 | 2 | WS-22297 | 2 |
| 36 | WASHER, M6 SPLIT LOCK S/S 18-8 | WS-22302 | 2 | WS-22302 | 2 |
| 37 | NUT, THREADED INSERT, M6 | NU-22770 | 1 | NU-22770 | 1 |
| 38* | BRACKET, CHIP TRAY | BT-29217 | 2 | BT-29217 | 2 |
| 39* | BUSHING, 5/8" SNAP, BLACK | BU-3611 | 4 | BU-3611 | 4 |
| 40* | CHIP TRAY WELD | 4652 | 2 | 4652 | 2 |
| 41* | SMOKER ELEMENT | EL-35002 | 2 | EL-35002 | 2 |
| 42* | ELEMENT COVER | 1010409 | 2 | 1011813 | 2 |
| 43* | NUT, 1/4-20 HEX S/S | NU-2437 | 4 | NU-2437 | 4 |
| 44* | NUT, #8-32 UNC KEPS ZP | NU-26526 | 4 | NU-26526 | 4 |
| 45* | PLUG, DOME, .187" HOLE | PG-28439 | 4 | PG-28439 | 4 |
| 46* | PROBE ASSEMBLY, PRODUCT | PR-36065 | 2 | PR-36065 | 2 |
| 47* | PROBE COVER | 5009712 | 2 | 5009712 | 2 |
| 48* | PROBE WIRE HOLDER | 1017495 | 2 | 1017495 | 2 |
| 49* | PROBE RECEPTICAL, PRODUCT | PR-34705 | 1 | PR-34705 | 1 |
| 50* | SCREW, 6-32 x 1/2, NC PHIL, FLAT | SC-2239 | 4 | SC-2239 | 4 |
| 51* | SCREW, M4-0.7 x 6mm PHIL | SC-22271 | 4 | SC-22271 | 4 |
| 52* | SCREW, 8-32 x 2 SLOT PAN HEAD 18-8 S/S | SC-23154 | 4 | SC-23154 | 4 |
| 53* | SCREW, M3 x 0.5 x 16mm PAN | SC-22270 | 6 | SC-22270 | 6 |
| 54* | SENSOR, CAVITY | SN-38110 | 2 | SN-38110 | 2 |
| 55* | SENSOR GUARD | 1493 | 1 | 1493 | 1 |
| 56* | SENSOR MOUNTING BLOCK | BK-24427 | 2 | BK-24427 | 2 |
| 57* | SMOKE HEATER PLATE WELD | 5023426 | 2 | 5023426 | 2 |

*NOT SHOWN

# Electronic Components - 300-TH-III

## 230V Shown

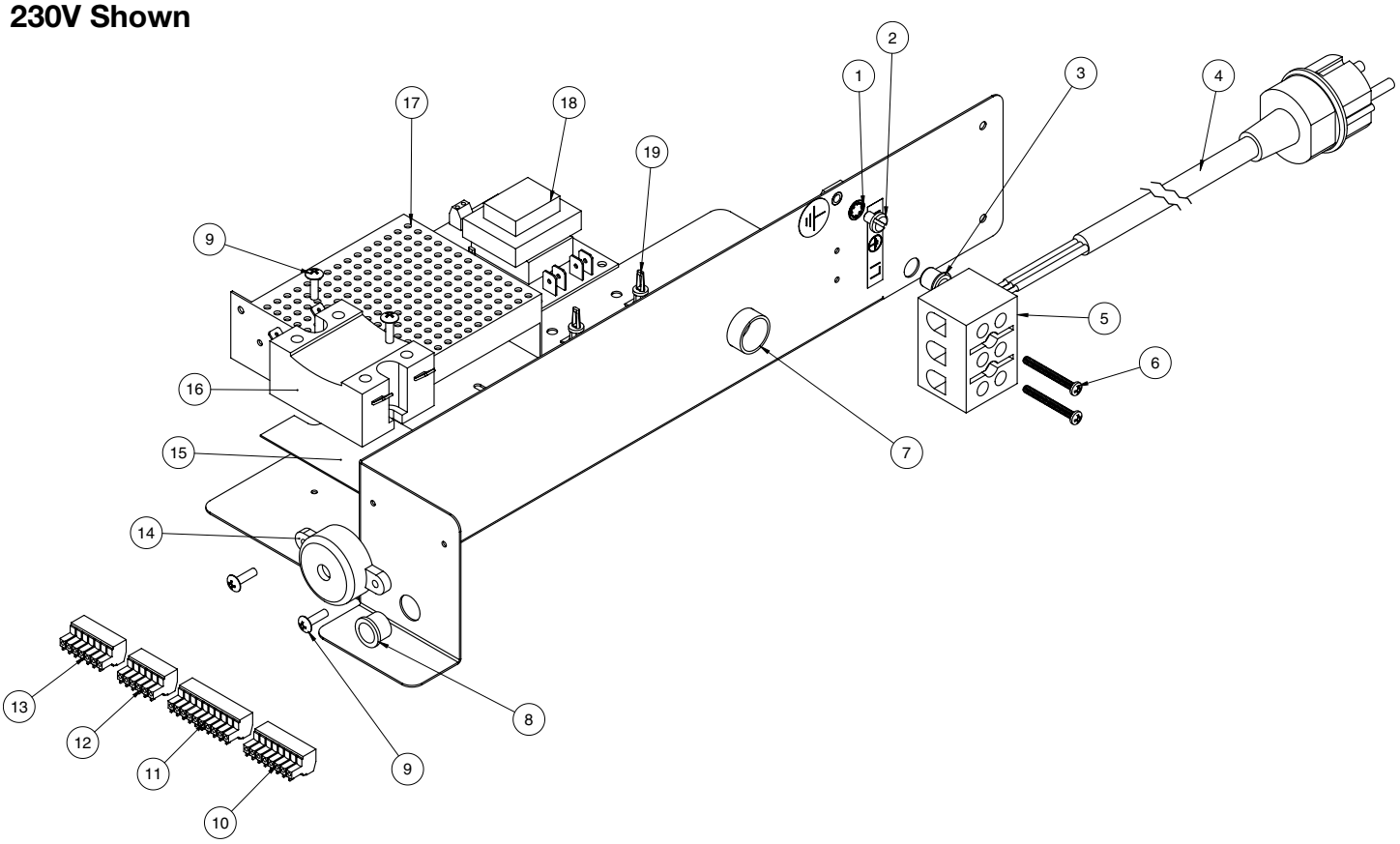


Part numbers and drawings are subject to change without notice.

| ITEM | DESCRIPTION | PART NO. | QTY | ITEM | DESCRIPTION | PART NO. | QTY |
|---|---|---|---|---|---|---|---|
| 1 | WASHER, STAR LOCK | WS-2467 | 1 | 10 | CONNECTOR, 6 PIN | CR-33719 | 1 |
| 2 | SCREW, 10-32 x 1/4" PAN HD GROUND | SC-2190 | 1 | 11 | CONNECTOR, 10 PIN | CR-33717 | 1 |
| 3 | BUSHING, 3/8" BLACK HOLE | BU-3419 | 1 | 12 | CONNECTOR, 7 PIN | CR-33762 | 1 |
| 4 | CORDSET 120V (NEMA 5-20) | CD-3397 | 1 | 13 | CONNECTOR, 8 PIN | CR-33761 | 1 |
| | 230V (CEE 7/7) | CD-3922 | 1 | 14 | BEEPER | BP-3567 | 1 |
| | 230V (CH2-16P) | CD-36231 | 1 | 15 | HEATSINK | HE-33926 | 1 |
| | 230V (BS1363) | CD-33925 | 1 | 16 | RELAY | RL-33829 | 1 |
| 5 | T-BLOCK | BK-3019 | 1 | 17 | BOARD, POWER SUPPLY 120V | BA-36144 | 1 |
| 6 | SCREW, 6-32 x 1-1/4" ROUND HD | SC-2365 | 2 | | 230V | BA-38586 | 1 |
| 7 | BUSHING, HOLE, 3/4” | BU-3008 | 1 | 18 | BOARD, VOLTAGE MONITOR | BA-33764 | 1 |
| 8 | BUSHING, HOLE, 1/2" | BU-3006 | 1 | 19 | SPACER, LOCK MOUNT | SP-33832 | 4 |
| 9 | SCREW, 6-32 x 1/2” NC PHIL TRUSS | SC-2472 | 6 | | | | |

**⚠ WARNING**

To prevent serious injury, death, or property damage, **always** disconnect the appliance from the power source before cleaning or servicing.

**⚠ DANGER**

To prevent serious injury, death, or property damage, **always** lock-out or post breaker panel until service work has been completed.

## Electronic Components - 500-TH-III

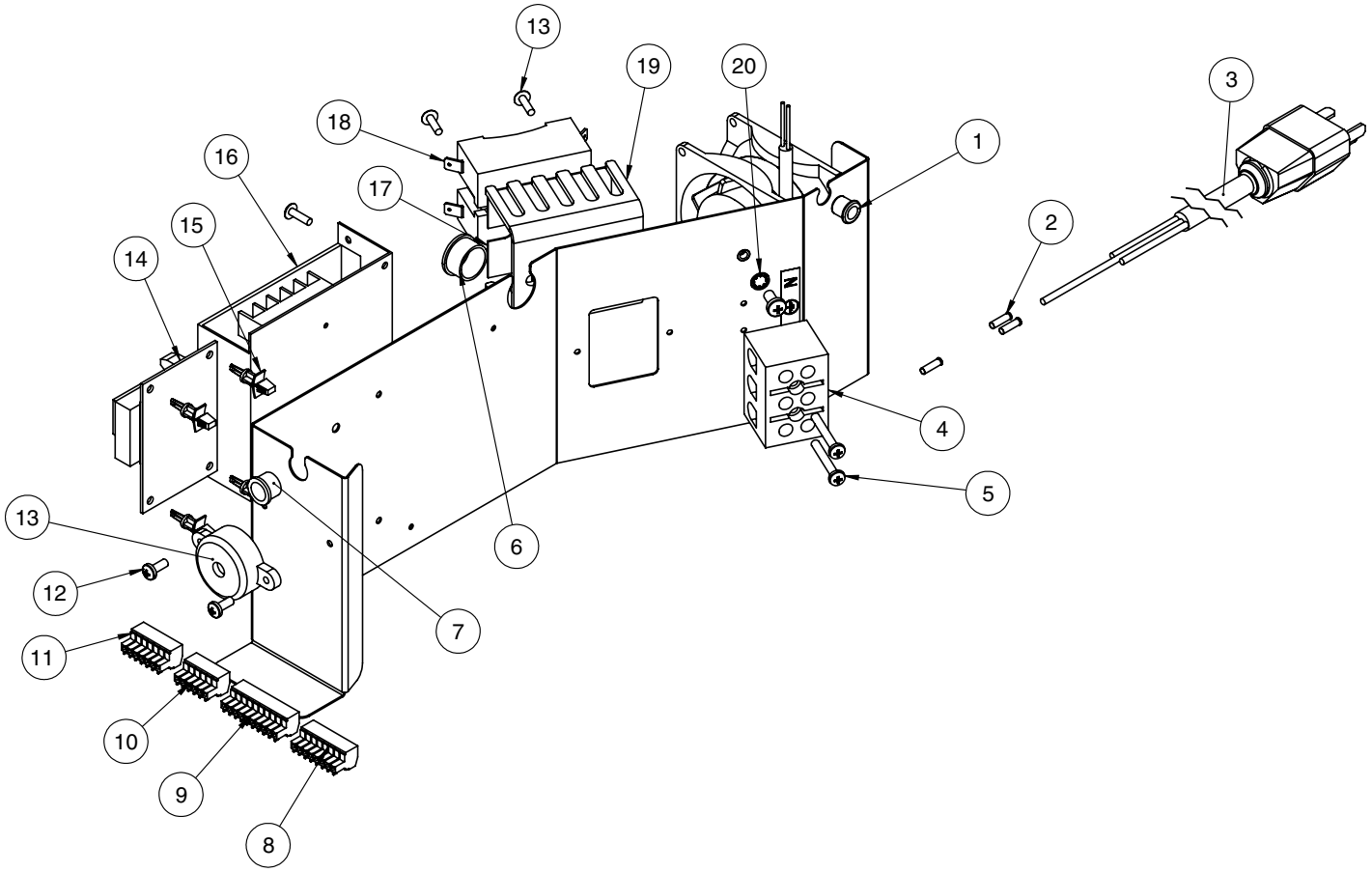


Part numbers and drawings are subject to change without notice.

| ITEM | DESCRIPTION | PART NO. | QTY | ITEM | DESCRIPTION | PART NO. | QTY |
|---|---|---|---|---|---|---|---|
| 1 | BUSHING, 3/8" BLACK HOLE | BU-3419 | 1 | 10 | CONNECTOR, 7 PIN | CR-33762 | 1 |
| 2 | CONNECTOR, #12 FERRULE | CR-34830 | 3 | 11 | CONNECTOR, 8 PIN | CR-33761 | 1 |
| 3 | CORDSET 120V (NEMA 5-20) | CD-3397 | 1 | 12 | SCREW, 6-32 x 1/2" NC PHIL TRUSS | SC-2472 | 6 |
| | 230V (CEE 7/7) | CD-3922 | 1 | 13 | BEEPER | BP-3567 | 1 |
| | 230V (CH2-16P) | CD-36231 | 1 | 14 | BOARD, VOLTAGE MONITOR | BA-33764 | 1 |
| | 230V (BS1363) | CD-33925 | 1 | 15 | SPACER, LOCK MOUNT | SP-33832 | 4 |
| | 230V (AS/NZS 3112) | CD-38149 | 1 | 16 | BOARD, POWER SUPPLY 120V, 208-240V | BA-36144 | 1 |
| 4 | T-BLOCK | BK-3019 | 1 | | 230V | BA-38586 | 1 |
| 5 | SCREW, 6-32 x 1-1/4" ROUND HD | SC-2365 | 2 | 17 | HEATSINK | HE-33926 | 1 |
| 6 | BUSHING, 3/4" HOLE | BU-3008 | 1 | 18 | RELAY | RL-33829 | 1 |
| 7 | BUSHING, 1/2" HOLE | BU-3006 | 1 | 19 | HEATSINK, BASE | 1014450 | 1 |
| 8 | CONNECTOR, 6 PIN | CR-33719 | 1 | 20 | STAR LOCK WASHER | WS-2467 | 1 |
| 9 | CONNECTOR, 10 PIN | CR-33717 | 1 | | | | |

**⚠ WARNING**

To prevent serious injury, death, or property damage, **always** disconnect the appliance from the power source before cleaning or servicing.

**⚠ DANGER**

To prevent serious injury, death, or property damage, **always** lock-out or post breaker panel until service work has been completed.

# Electronic Components - 750, 1000, 1200-TH-III

## 1200-TH-III 230V Shown

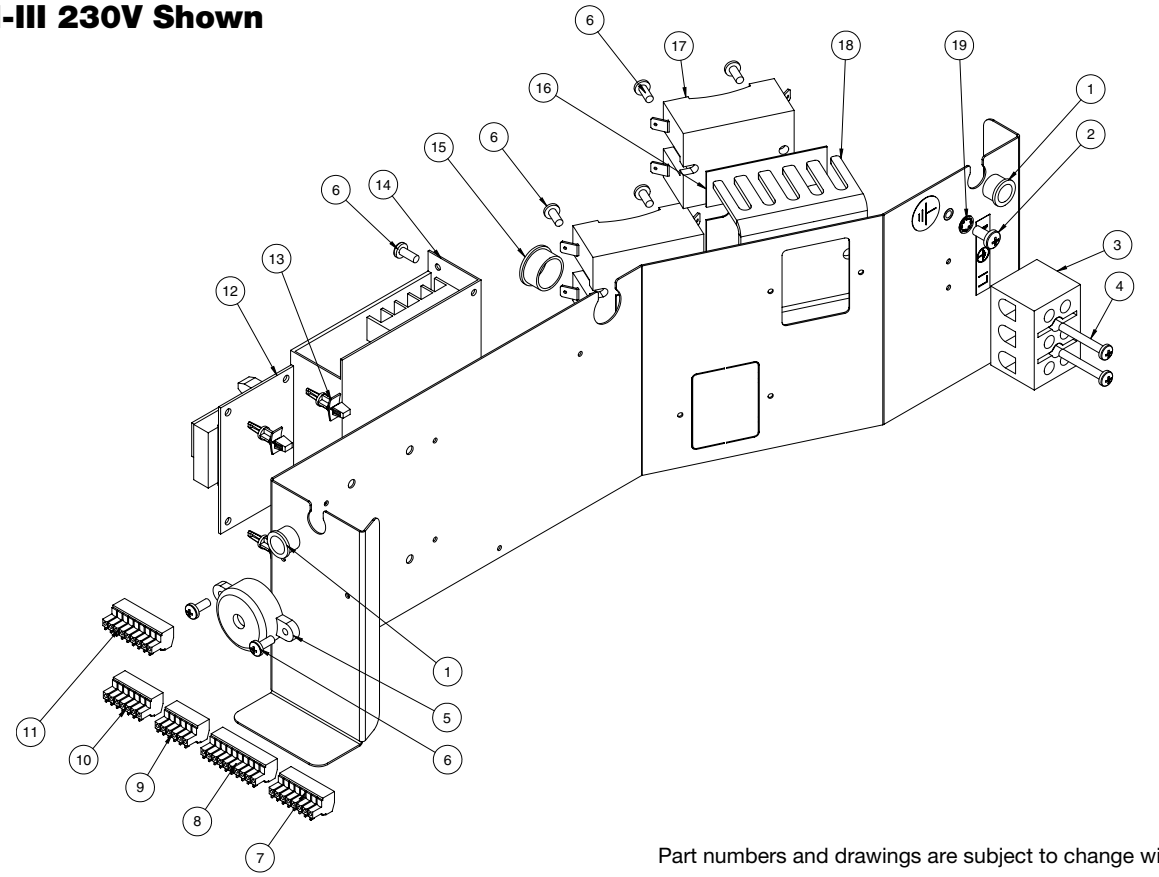


Part numbers and drawings are subject to change without notice.

| ITEM | DESCRIPTION | PART NO. | QTY | ITEM | DESCRIPTION | PART NO. | QTY |
|---|---|---|---|---|---|---|---|
| 1 | BUSHING, 1/2" HOLE | BU-3006 | 1 | 15 | BUSHING, 3/4" WHITE SNAP | BU-3008 | 1 |
| 2 | SCREW, M5 x 0.8 x 10mm PAN | SC-22766 | 1 | 16 | HEATSINK PAD | HE-33926 | 1** |
| 3 | T-BLOCK | BK-3019 | 1 | 17 | RELAY | RL-33829 | 1** |
| 4 | SCREW, M4 x 0.7 x 30mm PAN | SC-29276 | 2 | 18 | HEAT SINK, SSR BASE | 1014450 | 1** |
| 5 | BEEPER | BP-3567 | 1 | 19 | STAR LOCK WASHER | WS-2467 | 1 |
| 6 | SCREW, M4 x 0.7 x 10mm PAN | SC-22273 | 8 | 20* | CORDSET 120V (NEMA 5-20) | CD-3397 | 1 |
| 7 | CONNECTOR, 6 PIN | CR-33719 | 1 | | 230V (CEE 7/7) | CD-3922 | 1 |
| 8 | CONNECTOR, 10 PIN | CR-33717 | 1 | | 230V (CH2-16P) | CD-36231 | 1 |
| 9 | CONNECTOR, 7 PIN | CR-33762 | 1 | | 230V (BS1363) | CD-33925 | 1 |
| 10 | CONNECTOR, 8 PIN | CR-33761 | 1 | | 230V (AS/NZS 3112) | CD-38149 | 1 |
| 11 | CONNECTOR, 9 PIN, 1200-TH-III ONLY | CR-33718 | 1 | 21* | CONNECTOR, #12 FERRULE | CR-34830 | 3 |
| 12 | BOARD, VOLTAGE MONITOR | BA-33764 | 1 | 22* | SERVICE KIT - 1 COMPARTMENT TH/III | 5016623 | 1 |
| 13 | SPACER, LOCK MOUNT | SP-33832 | 4 | | SERVICE KIT - 2 COMPARTMENT TH/III | 5016625 | 1 |
| 14 | BOARD, POWER SUPPLY 120V, 208-240V | BA-36144 | 1 | | | | |
| | 230V, 380-415V | BA-38586 | 1 | | | | |

**PER COMPARTMENT * NOT SHOWN

**⚠ WARNING**

To prevent serious injury, death, or property damage, **always** disconnect the appliance from the power source before cleaning or servicing.

**⚠ DANGER**

To prevent serious injury, death, or property damage, **always** lock-out or post breaker panel until service work has been completed.

# Electronic Components - 767, 1000, 1200, 1767-SK-III

## 1767-SK-III 208-240V Shown

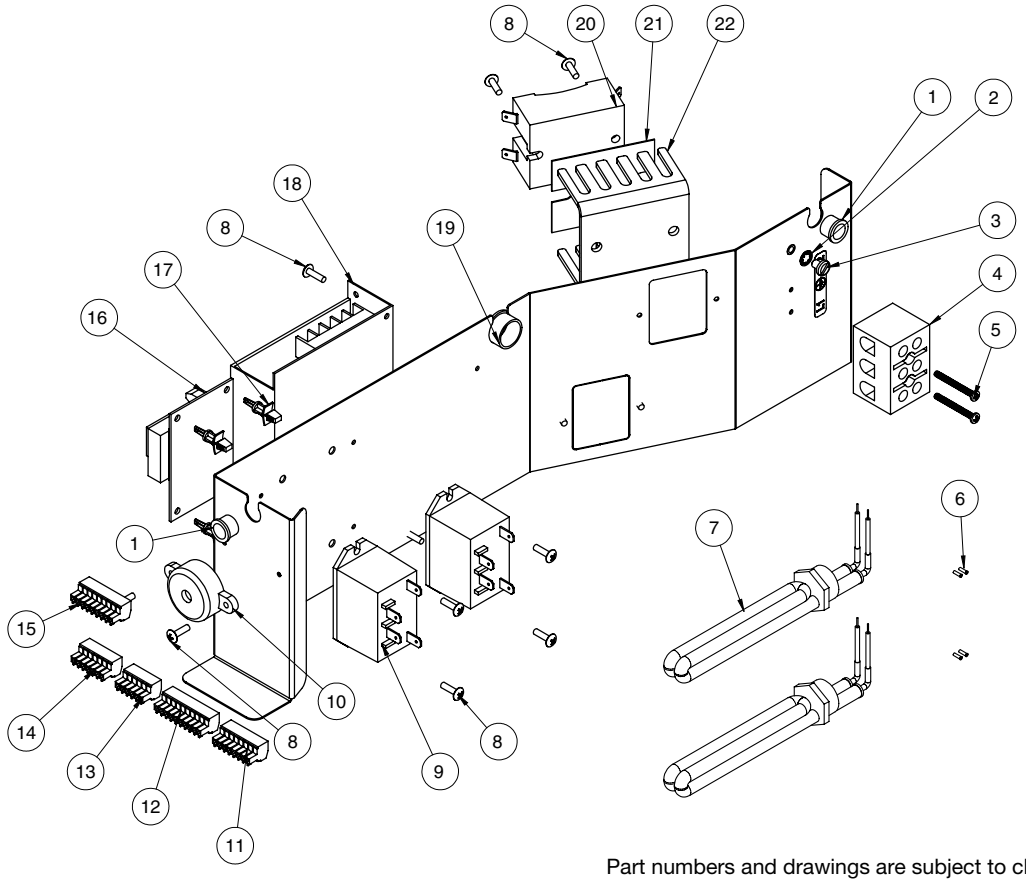


Part numbers and drawings are subject to change without notice.

| ITEM | DESCRIPTION | PART NO. | QTY | ITEM | DESCRIPTION | PART NO. | QTY |
|---|---|---|---|---|---|---|---|
| 1 | BUSHING, 1/2" HOLE | BU-3006 | 1 | 17 | SPACER, LOCK MOUNT | SP-33832 | 4 |
| 2 | STAR LOCK WASHER | WS-2467 | 1 | 18 | BOARD, POWER SUPPLY 208-240V | BA-36144 | 1 |
| 3 | SCREW, 10-32 x 1/4" PAN HD GROUND | SC-2190 | 1 | | 230V, 380-415V | BA-38586 | 1 |
| 4 | T-BLOCK | BK-3019 | 1 | 19 | BUSHING, 3/8" WHITE SNAP | BU-3008 | 1 |
| 5 | SCREW, 6-32 x 1-1/4" ROUND HD | SC-2365 | 2 | 20 | RELAY,SPST 30A @ 277 VAC 12VDC | RL-33558 | 1** |
| 6 | CONNECTOR, FERRULE #18 | CR-34827 | 2* | 21 | HEATSINK PAD, RELAY | HE-33926 | 1** |
| 7 | SMOKER ELEMENT | EL-38104 | 1** | 22 | HEAT SINK, SSR BASE | 1014450 | 1** |
| 8 | SCREW, 6-32 x 1/2, PHIL TRUSS | SC-2472 | 12 | 23* | CORDSET 120V (NEMA 5-20) | CD-3397 | 1 |
| 9 | RELAY, 230V, 25A | RL-33829 | 1** | | 230V (CEE 7/7) | CD-3922 | 1 |
| 10 | BEEPER | BP-3567 | 1 | | 230V (CH2-16P) | CD-36231 | 1 |
| 11 | CONNECTOR, 6 PIN | CR-33719 | 1 | | 230V (BS1363) | CD-33925 | 1 |
| 12 | CONNECTOR, 10 PIN | CR-33717 | 1 | | 230V (AS/NZS 3112) | CD-38149 | 1 |
| 13 | CONNECTOR, 7 PIN | CR-33762 | 1 | 24* | CONNECTOR, #12 FERRULE | CD-34830 | 3 |
| 14 | CONNECTOR, 8 PIN | CR-33761 | 1 | 25* | SERVICE KIT - 1 COMPARTMENT SK/III | 5016624 | 1 |
| 15 | CONNECTOR, 9 PIN | CR-33718 | 1 | | SERVICE KIT - 2 COMPARTMENT SK/III | 5016626 | 1 |
| 16 | BOARD, VOLTAGE MONITOR | BA-33764 | 1 | | | | |

**PER COMPARTMENT  * NOT SHOWN

**⚠ WARNING**

To prevent serious injury, death, or property damage, **always** disconnect the appliance from the power source before cleaning or servicing.

**⚠ DANGER**

To prevent serious injury, death, or property damage, **always** lock-out or post breaker panel until service work has been completed.

## Cable Heating Kits

| | CABLE HEATING KIT > (one kit required per cavity) | #4880 (500) | #4881 (750, 1000, 1200, 1767) | #4880 UK ONLY (1200) 4900W |
|---|---|---|---|---|
| **ITEM** | **DESCRIPTION** | **QTY** | **QTY** | **QTY** |
| CB-3045 | CABLE HEATING ELEMENT | 134 ft. | 210 ft. | 134 ft. |
| CR-3226 | RING CONNECTOR | 4 | 12 | 4 |
| IN-3488 | INSULATION CORNER | 1 ft. | 1 ft. | 1 ft. |
| BU-3105 | SHOULDER BUSHING | 4 | 12 | 4 |
| BU-3106 | CUP BUSHING | 4 | 12 | 4 |
| ST-2439 | STUD | 4 | 12 | 4 |
| NU-2215 | HEX NUT | 8 | 24 | 8 |
| SL-3063 | INSULATING SLEEVE | 4 | 12 | 4 |
| TA-3540 | ELECTRICAL TAPE | 1 ROLL | 1 ROLL | 1 ROLL |

**⚠ WARNING**

To prevent serious injury, death, or property damage, **always** disconnect the appliance from the power source before cleaning or servicing.

**⚠ DANGER**

To prevent serious injury, death, or property damage, **always** lock-out or post breaker panel until service work has been completed.

## HACCP Data Logger (OPTION)

| ITEM | DESCRIPTION | QTY |
|---|---|---|
| 5015562 | HACCP DATA LOGGER, RETRO-FIT KIT | 1 |
| CC-37264 | — HACCP DATA LOGGER* | 1 |
| 5014750 | HACCP PACKAGE WITH USB PORT | 1 |
| CB-34893 | — CAP, WATERPROOF USB SHIELDED | 1 |
| CB-34894 | — CABLE USB WATERPROOF SHIELDED | 1 |

* CC-37264 may be ordered as a separate item for units that already have the Data Logger Kit installed.

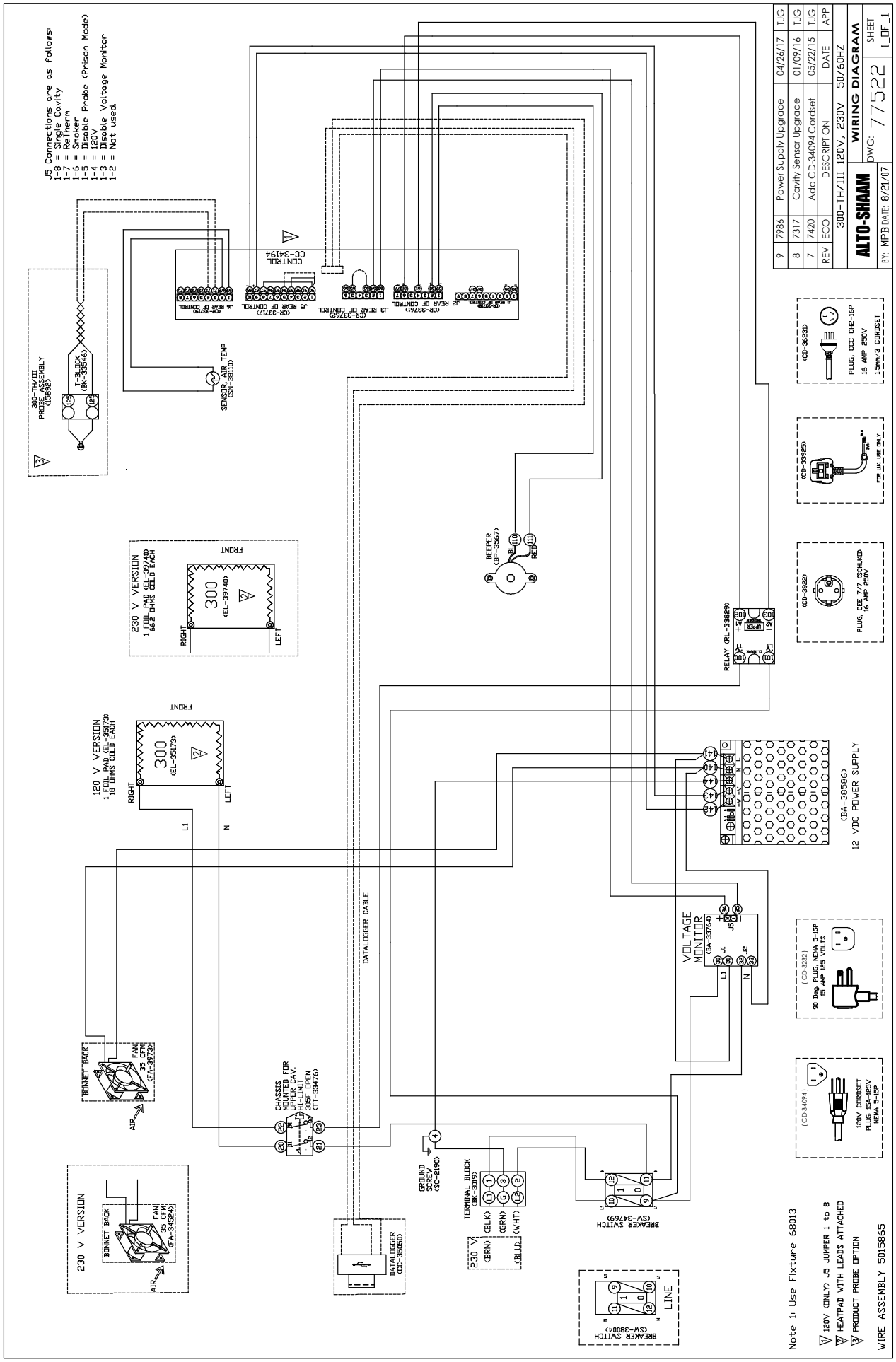
J5 Connections are as follows:
1-8 = Single Cavity
1-7 = Retherm
1-6 = Smoker
1-5 = Disable Probe (Prison Mode)
1-4 = 120V
1-3 = Disable Voltage Monitor
1-2 = Not used.
300-TH/III PROBE ASSEMBLY (15892)
T-BLOCK (BK-33546)
SENSOR, AIR TEMP (SN-38110)
CONTROL CC-34194
J6 REAR OF CONTROL (CR-33717)
J5 REAR OF CONTROL (CR-33762)
J3 REAR OF CONTROL (CR-33761)
J2 REAR OF CONTROL (CR-33718)
230 V VERSION
1 FOIL PAD (EL-39740)
66.2 OHMS COLD EACH
300 (EL-39740)
FRONT
RIGHT
LEFT
120 V VERSION
1 FOIL PAD (EL-35173)
18 OHMS COLD EACH
300 (EL-35173)
BEEPER (BP-3567)
RELAY (RL-33829)
(BA-38586)
12 VDC POWER SUPPLY
VOLTAGE MONITOR (BA-33764)
DATALOGGER CABLE
BONNET BACK
FAN 35 CFM (FA-39793)
AIR
CHASSIS MOUNTED FOR UPPER CAV. HI-LIMIT 305F OPEN (TT-33476)
GROUND SCREW (SC-2190)
TERMINAL BLOCK (BK-3019)
230 V (BRN) (BLK) (GRN) (WHT) (BLU)
BREAKER SWITCH (SW-34769)
230 V VERSION
BONNET BACK
FAN 35 CFM (FA-34524)
DATALOGGER (CC-35050)
LINE
BREAKER SWITCH (SW-38004)
(CD-36231) PLUG, CCC CH2-16P 16 AMP 250V 1.5mm/3 CORDSET
(CD-33925) FOR U.K. USE ONLY
(CD-3922) PLUG, CEE 7/7 (SCHUKO) 16 AMP 250V
(CD-3232) 90 Deg. PLUG, NEMA 5-15P 15 AMP 125 VOLTS
(CD-34094) 120V CORDSET PLUG 15A-125V NEMA 5-15P
Note 1: Use Fixture 68013
120V (ONLY) J5 JUMPER 1 to 8
HEATPAD WITH LEADS ATTACHED
PRODUCT PROBE OPTION
WIRE ASSEMBLY 5015865
9 7986 Power Supply Upgrade 04/26/17 TJG
8 7317 Cavity Sensor Upgrade 01/09/16 TJG
7 7420 Add CD-34094 Cordset 05/22/15 TJG
REV ECO DESCRIPTION DATE APP
300-TH/III 120V, 230V 50/60HZ
ALTO-SHAAM
WIRING DIAGRAM
DWG: 77522
SHEET 1_OF_1
BY: MPB DATE: 8/21/07

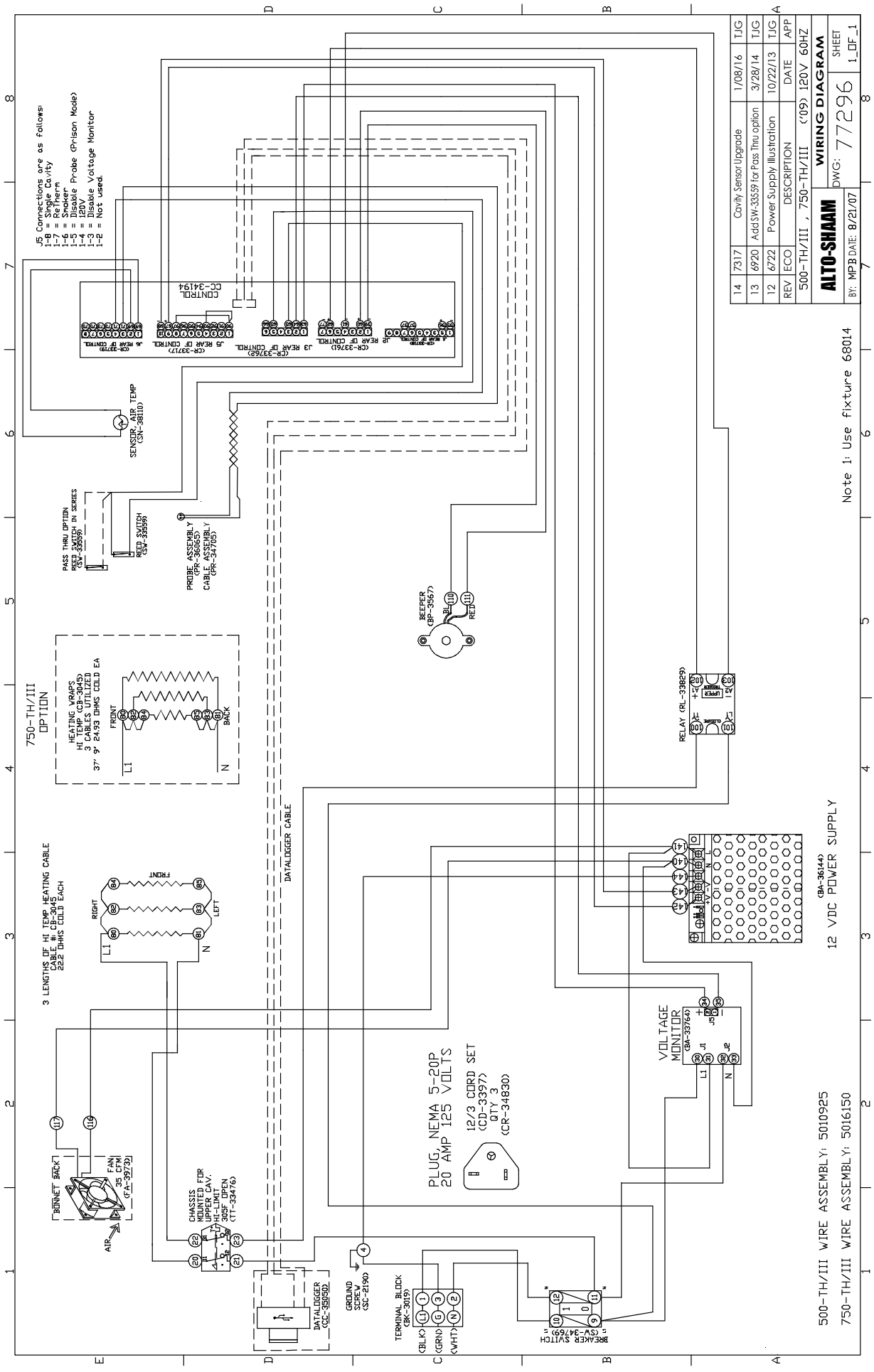
J5 Connections are as follows:
1-8 = Single Cavity
1-7 = Rotisserie
1-6 = Smoker
1-5 = Disable Probe (Prison Mode)
1-4 = 120V
1-3 = Disable Voltage Monitor
1-2 = Not used.
CONTROL CC-34194
J6 REAR DF CONTROL (CR-33719)
J5 REAR DF CONTROL (CR-33717)
J3 REAR DF CONTROL (CR-33762)
REAR DF CONTROL (CR-33761)
SENSOR, AIR TEMP (SN-38110)
PASS THRU OPTION REED SWITCH IN SERIES (SW-33599)
REED SWITCH (SW-33599)
PROBE ASSEMBLY (PR-36066)
CABLE ASSEMBLY (CR-34705)
BEEPER (BP-3567)
RELAY (RL-33829)
750-TH/III OPTION
HEATING WRAPS HI TEMP (CB-3045) 3 CABLES UTILIZED 37" 9" 24.53 OHMS COLD EA
FRONT
BACK
L1
N
3 LENGTHS OF HI TEMP HEATING CABLE CABLE #: CB-3045 22.2 OHMS COLD EACH
RIGHT
LEFT
DATALOGGER CABLE
BONNET BACK
FAN 35 CFM (FA-35732)
AIR
CHASSIS MOUNTED FOR UPPER CAV. HI LIMIT 305F OPEN (TT-33476)
DATALOGGER (DC-35902)
GROUND SCREW (SC-21960)
TERMINAL BLOCK (BK-3019)
(BLK)
(GRN)
(WHT)
BREAKER SWITCH (SW-34769)
PLUG, NEMA 5-20P 20 AMP 125 VOLTS
12/3 CORD SET (CD-3397) QTY 3 (CR-34830)
VOLTAGE MONITOR (BA-33764)
(BA-36144) 12 VDC POWER SUPPLY
Note 1: Use fixture 68014
500-TH/III WIRE ASSEMBLY: 5010925
750-TH/III WIRE ASSEMBLY: 5016150
14 7317 Cavity Sensor Upgrade 1/08/16 TJG
13 6920 Add SW-33559 for Pass Thru option 3/28/14 TJG
12 6722 Power Supply Illustration 10/22/13 TJG
REV ECO DESCRIPTION DATE APP
500-TH/III , 750-TH/III ('09) 120V 60HZ
ALTO-SHAAM
WIRING DIAGRAM
BY: MPB DATE: 8/21/07
DWG: 77296
SHEET 1_OF_1

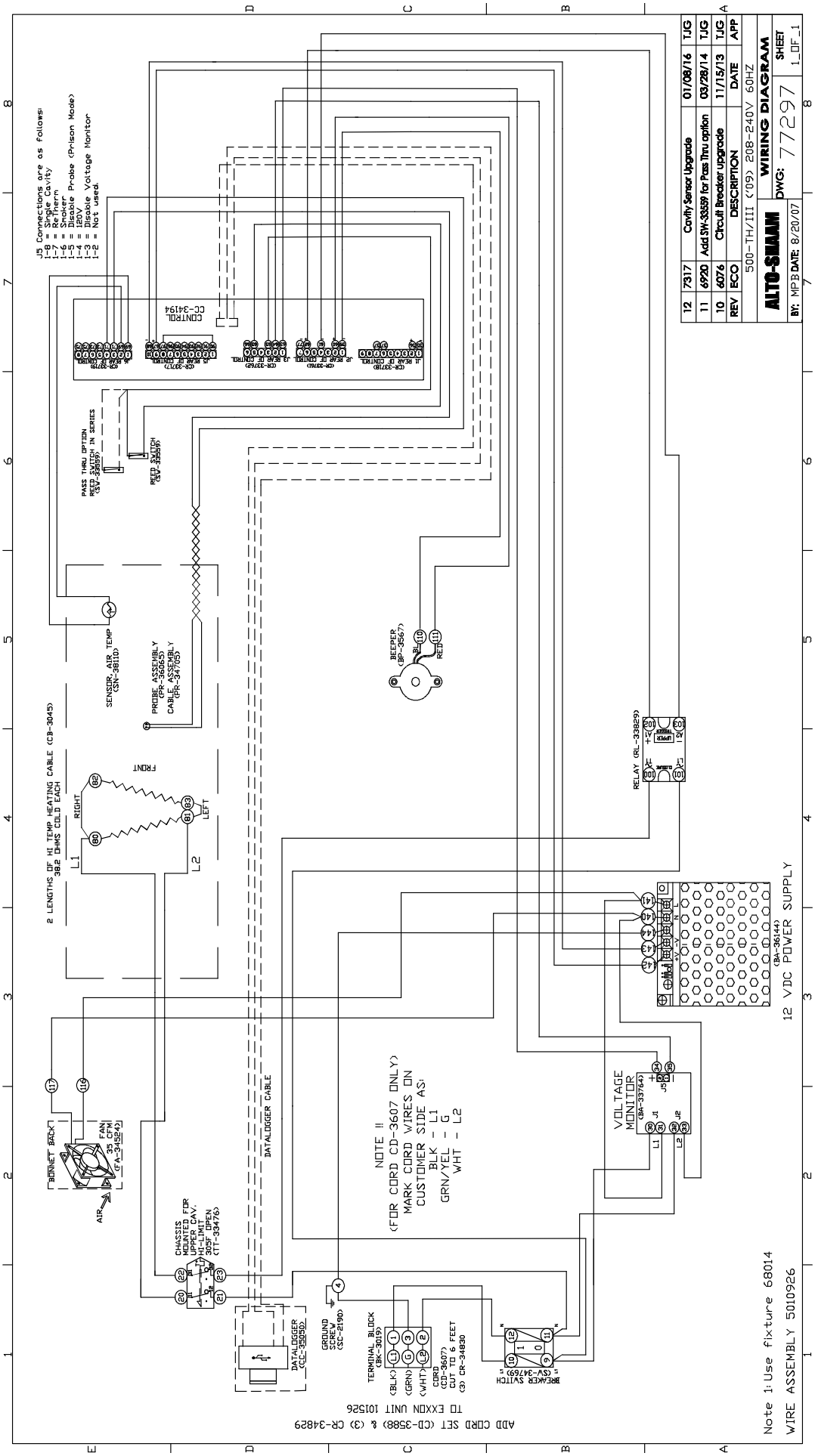

J5 Connections are as follows:
1-8 = Single Cavity
1-7 = ReTherm
1-6 = Smoker
1-5 = Disable Probe (Prison Mode)
1-4 = 120V
1-3 = Disable Voltage Monitor
1-2 = Not used.
CONTROL CC-34194
PASS THRU OPTION REED SWITCH IN SERIES (SW-33559)
REED SWITCH (SW-33559)
SENSOR, AIR TEMP (SN-38110)
PROBE ASSEMBLY (PR-36065) CABLE ASSEMBLY (PR-34705)
2 LENGTHS OF HI TEMP HEATING CABLE (CB-3045) 38.2 OHMS COLD EACH
FRONT
RIGHT
LEFT
L1
L2
BEEPER (BP-3567)
RELAY (RL-33829)
12 VDC POWER SUPPLY (BA-36144)
VOLTAGE MONITOR (BA-33764)
NOTE !! (FOR CORD CD-3607 ONLY) MARK CORD WIRES ON CUSTOMER SIDE AS: BLK - L1 GRN/YEL - G WHT - L2
DATALOGGER CABLE
BONNET BACK
FAN 35 CFM (FA-34524)
AIR
CHASSIS MOUNTED FOR UPPER CAV. HI-LIMIT 305F OPEN (TT-33476)
DATALOGGER (CC-35050)
GROUND SCREW (SC-2190)
TERMINAL BLOCK (BK-3019)
(BLK) (GRN) (WHT)
CORD (CD-3607) CUT TO 6 FEET (3) CR-34830
BREAKER SWITCH (SW-34769)
ADD CORD SET (CD-3588) & (3) CR-34829 TO EXXON UNIT 101526
Note 1: Use fixture 68014
WIRE ASSEMBLY 5010926
12 7317 Cavity Sensor Upgrade 01/08/16 TJG
11 6920 Add SW-33559 for Pass Thru option 03/28/14 TJG
10 6076 Circuit Breaker upgrade 11/15/13 TJG
REV ECO DESCRIPTION DATE APP
500-TH/III (09) 208-240V 60HZ
ALTO-SHAAM
WIRING DIAGRAM
DWG: 77297
SHEET 1_OF_1
BY: MPB DATE: 8/20/07

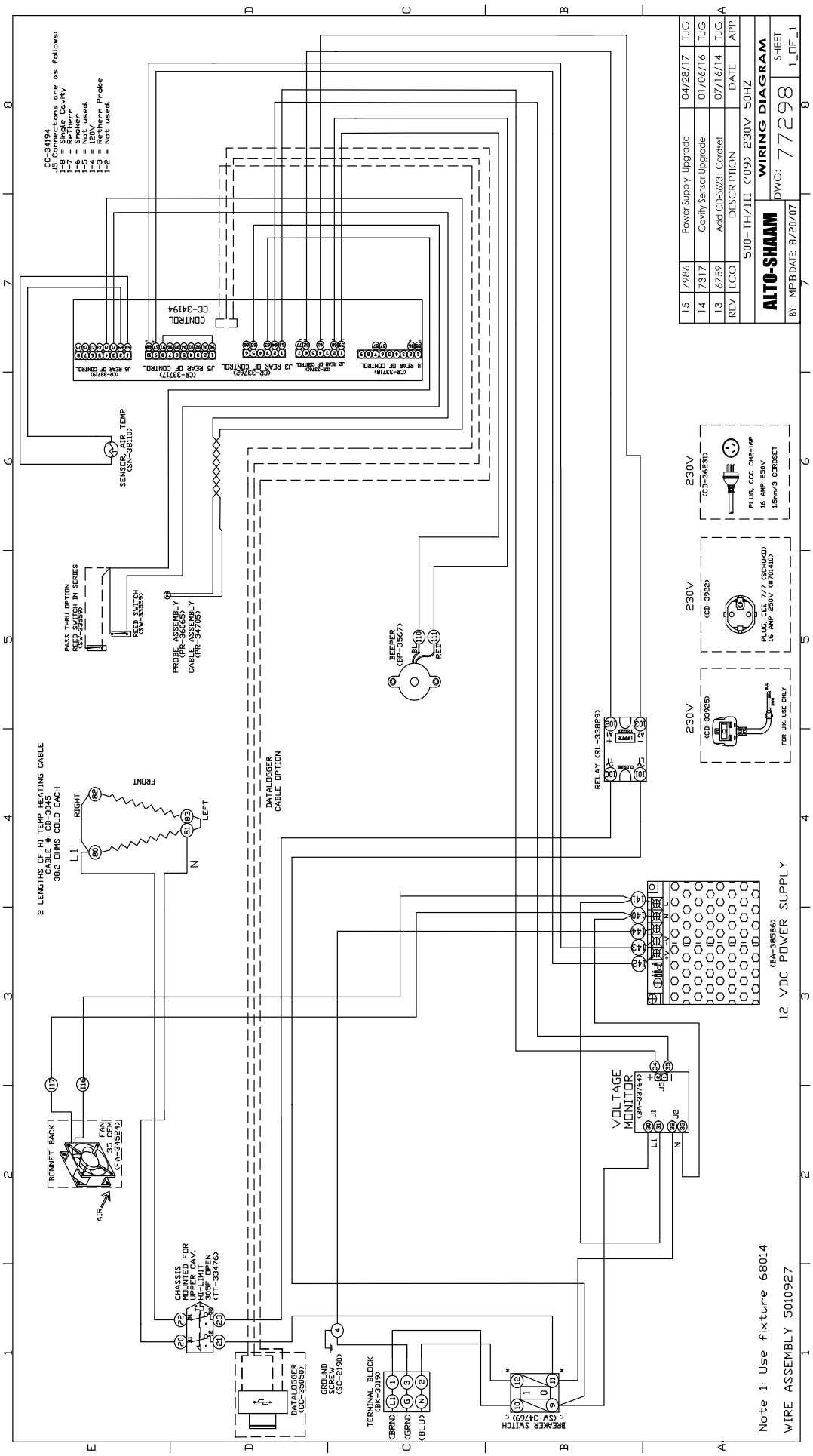

CC-34194
J5 Connections are as follows:
1-8 = Single Cavity
1-7 = ReTherm
1-6 = Smoker
1-5 = Not used.
1-4 = 120V
1-3 = Retherm Probe
1-2 = Not used.
CONTROL
CC-34194
SENSOR, AIR TEMP
(SN-38110)
PASS THRU OPTION
REED SWITCH IN SERIES
(SW-33559)
REED SWITCH
(SW-33559)
PROBE ASSEMBLY
(PR-36065)
CABLE ASSEMBLY
(PR-34705)
BEEPER
(BP-3567)
RELAY (RL-33829)
DATALOGGER
CABLE OPTION
2 LENGTHS OF HI TEMP HEATING CABLE
CABLE #: CB-3045
38.2 OHMS COLD EACH
FRONT
RIGHT
LEFT
BONNET BACK
FAN
35 CFM
(FA-34524)
AIR
CHASSIS
MOUNTED FOR
UPPER CAV.
HI-LIMIT
305F OPEN
(TT-33476)
DATALOGGER
(CC-35050)
GROUND
SCREW
(SC-2190)
TERMINAL BLOCK
(BK-3019)
BREAKER SWITCH
(SW-34769)
VOLTAGE
MONITOR
(BA-33764)
12 VDC POWER SUPPLY
(BA-38586)
230V
(CD-36231)
PLUG, CCC CH2-16P
16 AMP 250V
1.5mm/3 CORDSET
230V
(CD-3922)
PLUG, CEE 7/7 (SCHUKO)
16 AMP 250V (#701410)
230V
(CD-33925)
FOR UK USE ONLY
Note 1: Use fixture 68014
WIRE ASSEMBLY 5010927
15 7986 Power Supply Upgrade 04/28/17 TJG
14 7317 Cavity Sensor Upgrade 01/06/16 TJG
13 6759 Add CD-36231 Cordset 07/16/14 TJG
REV ECO DESCRIPTION DATE APP
500-TH/III ('09) 230V 50HZ
ALTO-SHAAM
WIRING DIAGRAM
DWG: 77298
SHEET 1_OF_1
BY: MPB DATE: 8/20/07

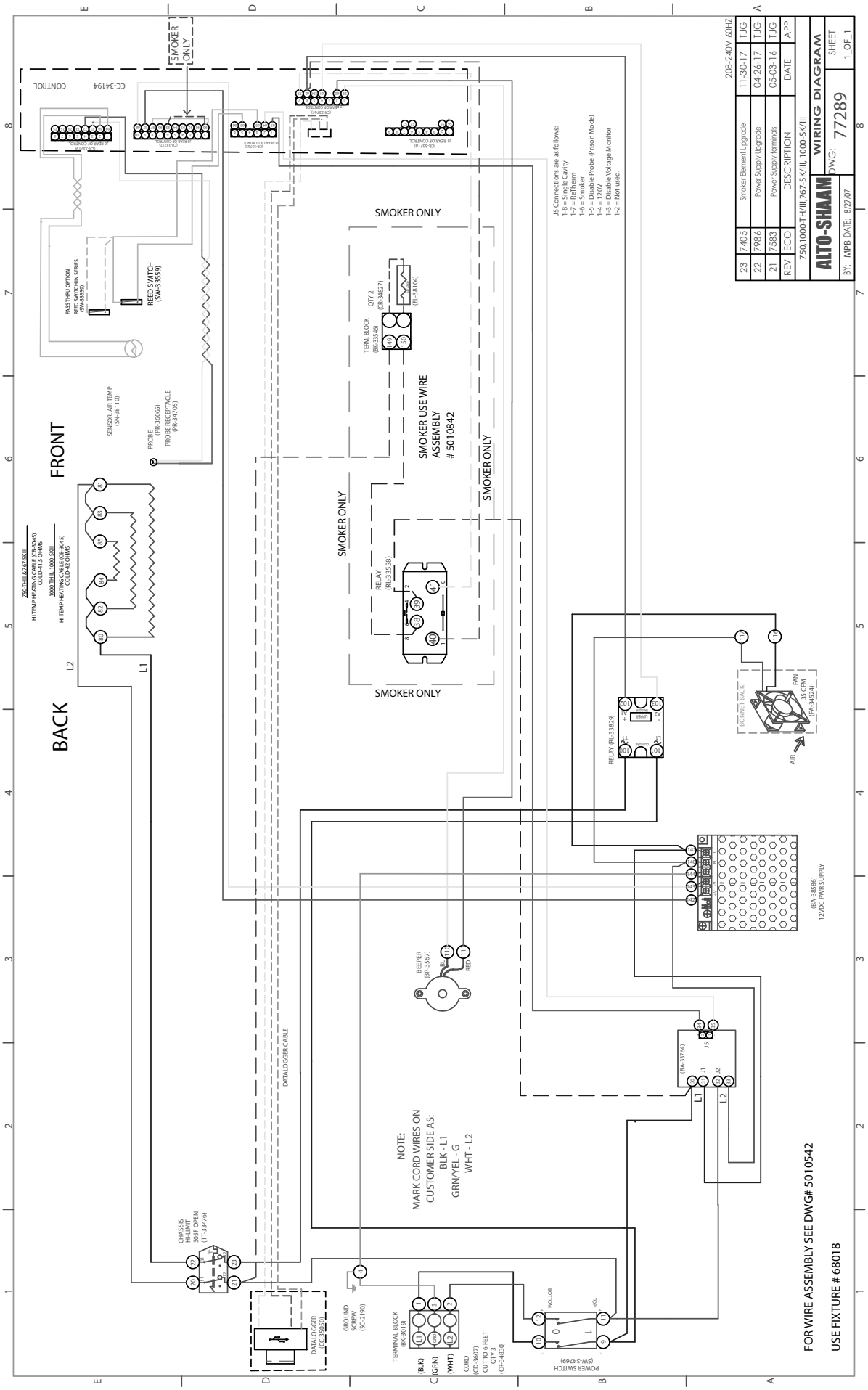

BACK
FRONT
SMOKER ONLY
SMOKER USE WIRE ASSEMBLY # 5010842
NOTE: MARK CORD WIRES ON CUSTOMER SIDE AS: BLK - L1 GRN/YEL - G WHT - L2
DATALOGGER CABLE
FOR WIRE ASSEMBLY SEE DWG# 5010542
USE FIXTURE # 68018
ALTO-SHAAM
WIRING DIAGRAM
DWG: 77289
SHEET 1_OF_1
BY: MPB DATE: 8/27/07
750,1000-TH/III,767-SK/III, 1000-SK/III
208-240V 60HZ
23 7405 Smoker Element Upgrade 11-30-17 TJG
22 7986 Power Supply Upgrade 04-26-17 TJG
21 7583 Power Supply terminals 05-03-16 TJG
REV ECO DESCRIPTION DATE APP

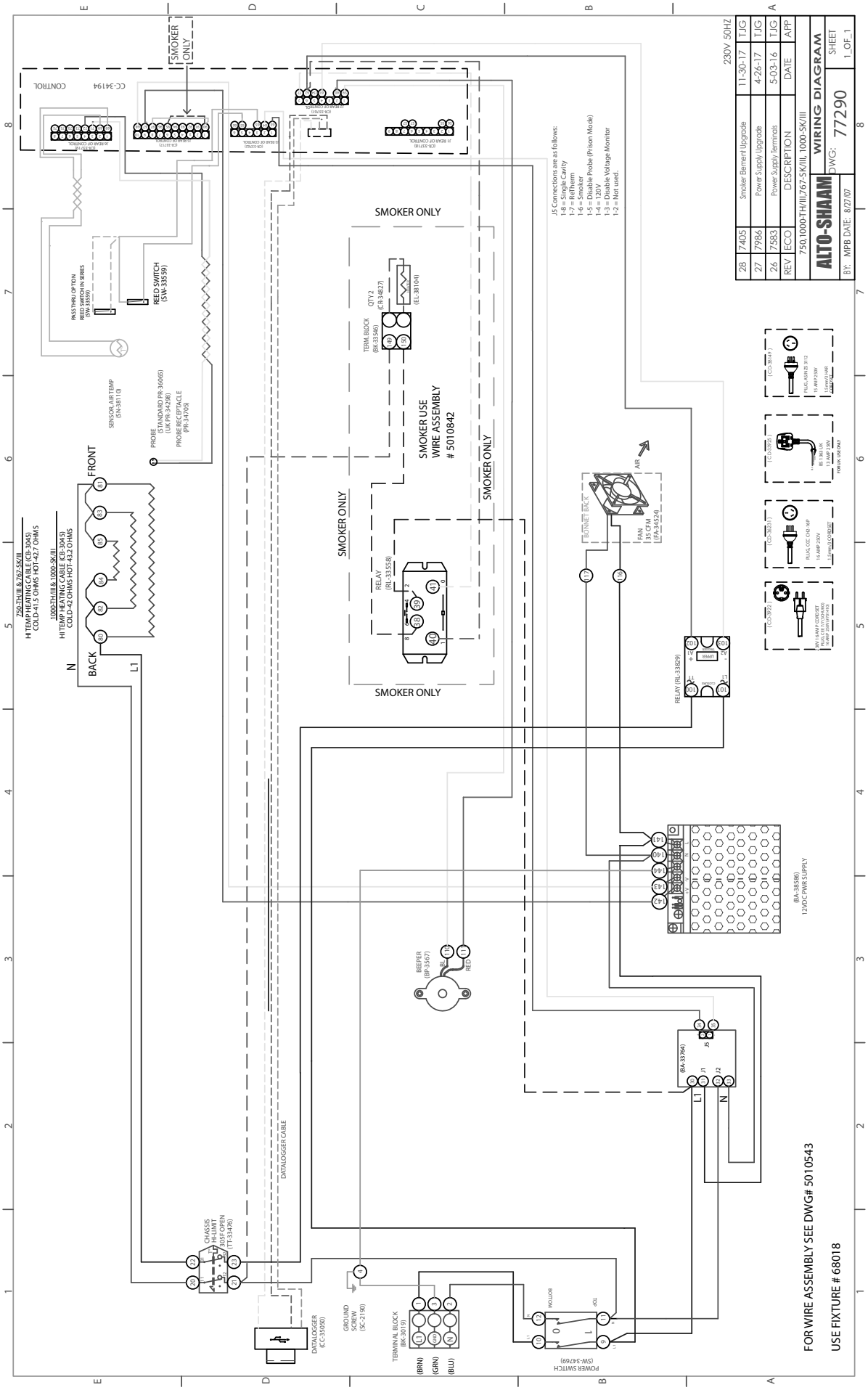

ALTO-SHAAM
WIRING DIAGRAM
DWG: 77290
SHEET 1_OF_1
BY: MPB DATE: 8/27/07
750,1000-TH/III,767-SK/III, 1000-SK/III
28 7405 Smoker Element Upgrade 11-30-17 TJG
27 7986 Power Supply Upgrade 4-26-17 TJG
26 7583 Power Supply Terminals 5-03-16 TJG
REV ECO DESCRIPTION DATE APP
230V 50HZ
J5 Connections are as follows:
1-8 = Single Cavity
1-7 = ReTherm
1-6 = Smoker
1-5 = Disable Probe (Prison Mode)
1-4 = 120V
1-3 = Disable Voltage Monitor
1-2 = Not used.
SMOKER ONLY
SMOKER USE WIRE ASSEMBLY # 5010842
FRONT
BACK
DATALOGGER CABLE
FOR WIRE ASSEMBLY SEE DWG# 5010543
USE FIXTURE # 68018

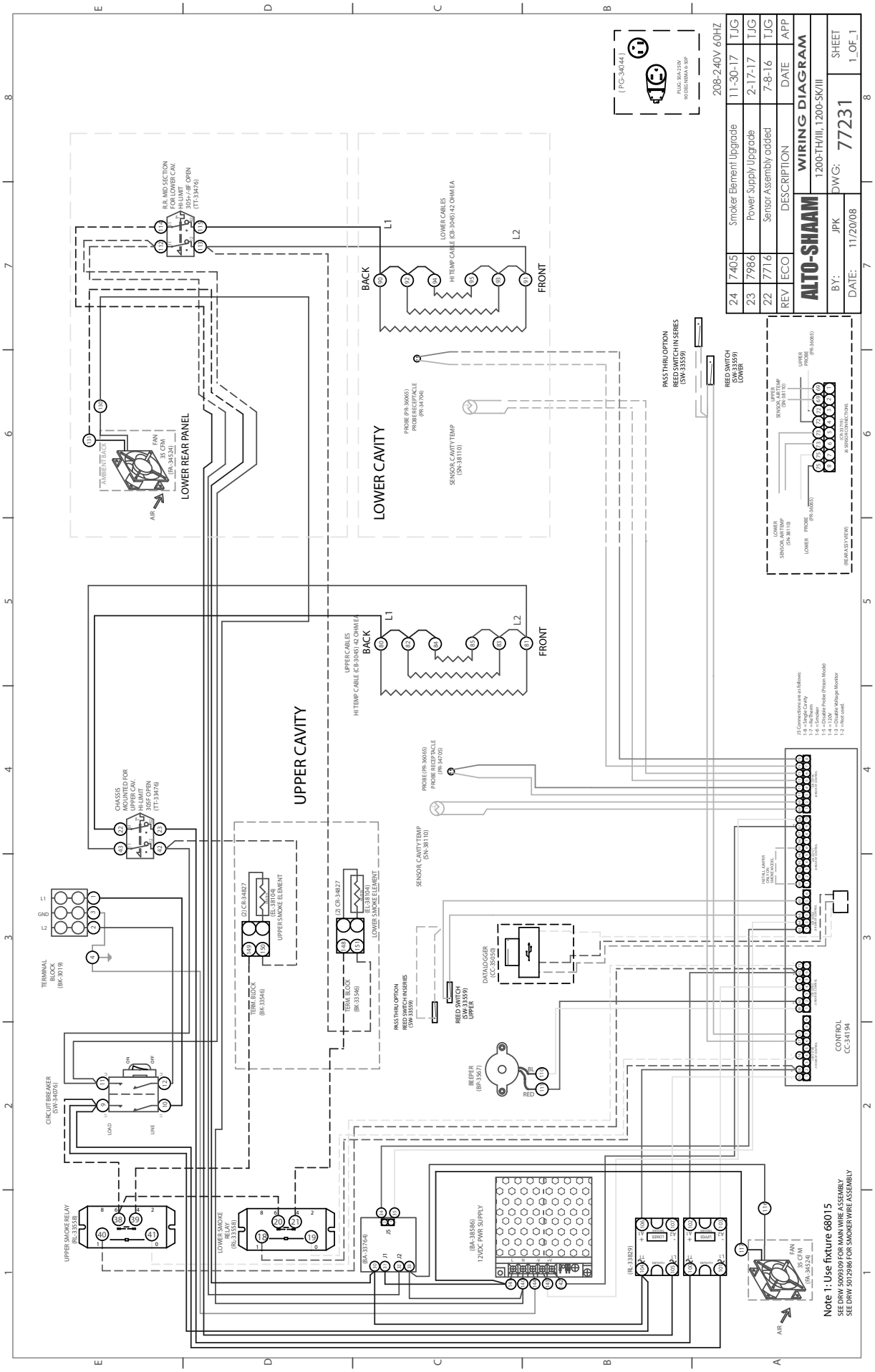
208-240V 60HZ
ALTO-SHAAM
WIRING DIAGRAM
1200-TH/III, 1200-SK/III
DWG: 77231
SHEET 1_OF_1
BY: JPK
DATE: 11/20/08
REV ECO DESCRIPTION DATE APP
24 7405 Smoker Element Upgrade 11-30-17 TJG
23 7986 Power Supply Upgrade 2-17-17 TJG
22 7716 Sensor Assembly added 7-8-16 TJG
LOWER REAR PANEL
LOWER CAVITY
UPPER CAVITY
CONTROL CC-34194
DATALOGGER (CC-35050)
BEEPER (BP-3667)
CIRCUIT BREAKER (SW-34076)
TERMINAL BLOCK (BK-3019)
UPPER SMOKE RELAY (RL-33458)
LOWER SMOKE RELAY (RL-33458)
(BA-33764)
(BA-38586) 12VDC PWR SUPPLY
(RL-33829)
FAN 35 CFM (FA-34524)
CHASSIS MOUNTED FOR UPPER CAVITY HI-LIMIT 305ºF OPEN (TT-33476)
B.R. MID-SECTION FOR LOWER CAVITY HI-LIMIT 305+/-8F OPEN (TT-33476)
(2) CR-34827 (EL-38104) UPPER SMOKE ELEMENT
(2) CR-34827 (EL-38104) LOWER SMOKE ELEMENT
TERM. BLOCK (BK-33546)
TERM. BLOCK (BK-33546)
HI TEMP CABLE (CB-3045) 42 OHM EA
UPPER CABLES
LOWER CABLES
PROBE (PR-36065) PROBE RECEPTACLE (PR-34705)
SENSOR, CAVITY TEMP (SN-38110)
PASS THRU OPTION REED SWITCH HARNESSES (SW-33559)
REED SWITCH (SW-33559) UPPER
REED SWITCH (SW-33559) LOWER
PASS THRU OPTION REED SWITCH HARNESS (SW-33559)
SENSOR, AIR TEMP (SN-38111)
PROBE (PR-34057)
(CR-33770) VERIFY BEFORE USE
(PG-34044)
PLUG 30A 250V NEMA 6-30P
Note 1: Use fixture 68015
SEE DRW 500939 FOR MAIN WIRE ASSEMBLY
SEE DRW 501298 FOR SMOKER WIRE ASSEMBLY

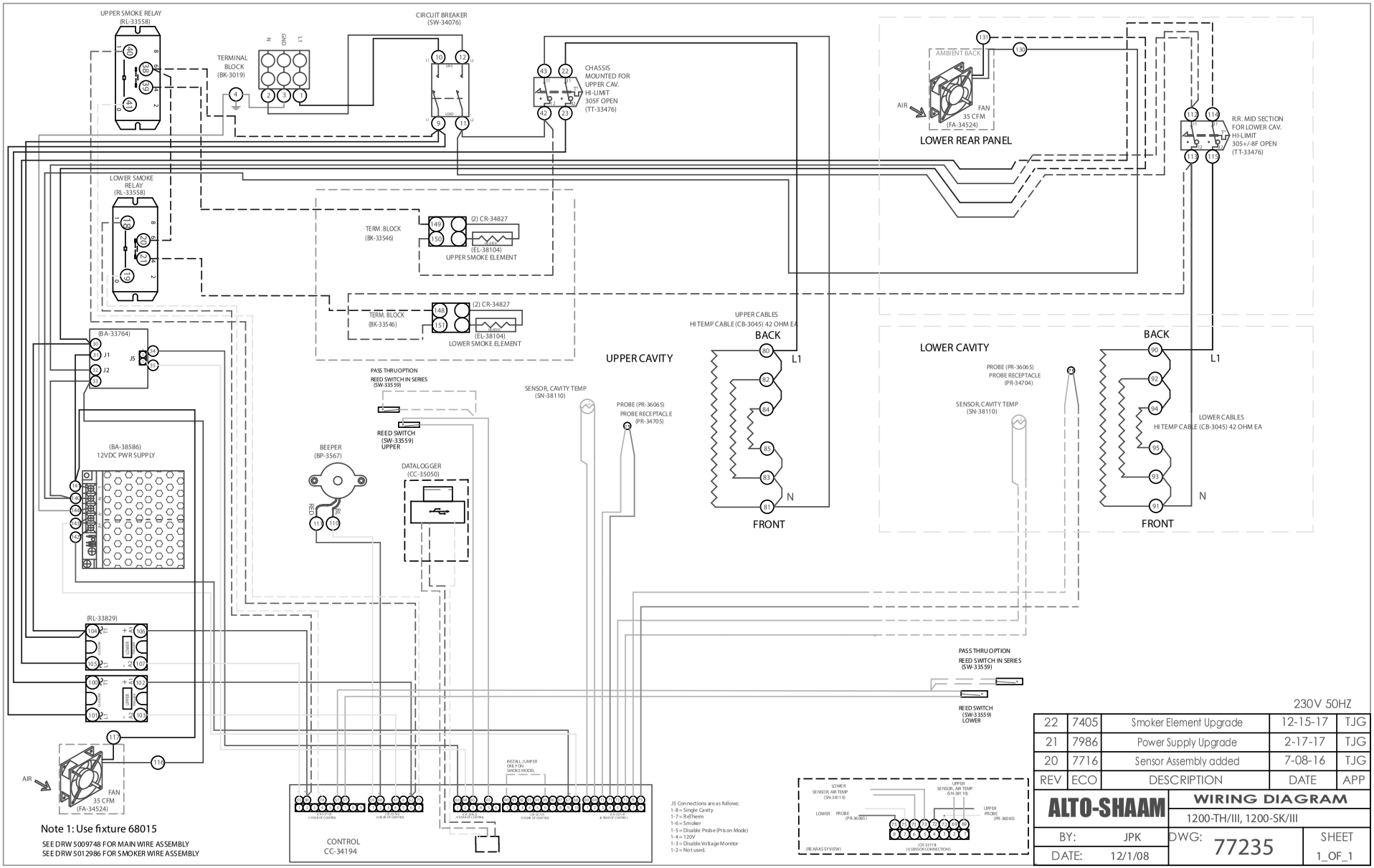


| REV | ECO | DESCRIPTION | DATE | APP |
|---|---|---|---|---|
| 22 | 7405 | Smoker Element Upgrade | 12-15-17 | TJG |
| 21 | 7986 | Power Supply Upgrade | 2-17-17 | TJG |
| 20 | 7716 | Sensor Assembly added | 7-08-16 | TJG |

| ALTO-SHAAM | WIRING DIAGRAM 1200-TH/III, 1200-SK/III | |
|---|---|---|
| BY: JPK | DWG: 77235 | SHEET 1_OF_1 |
| DATE: 12/1/08 | | |

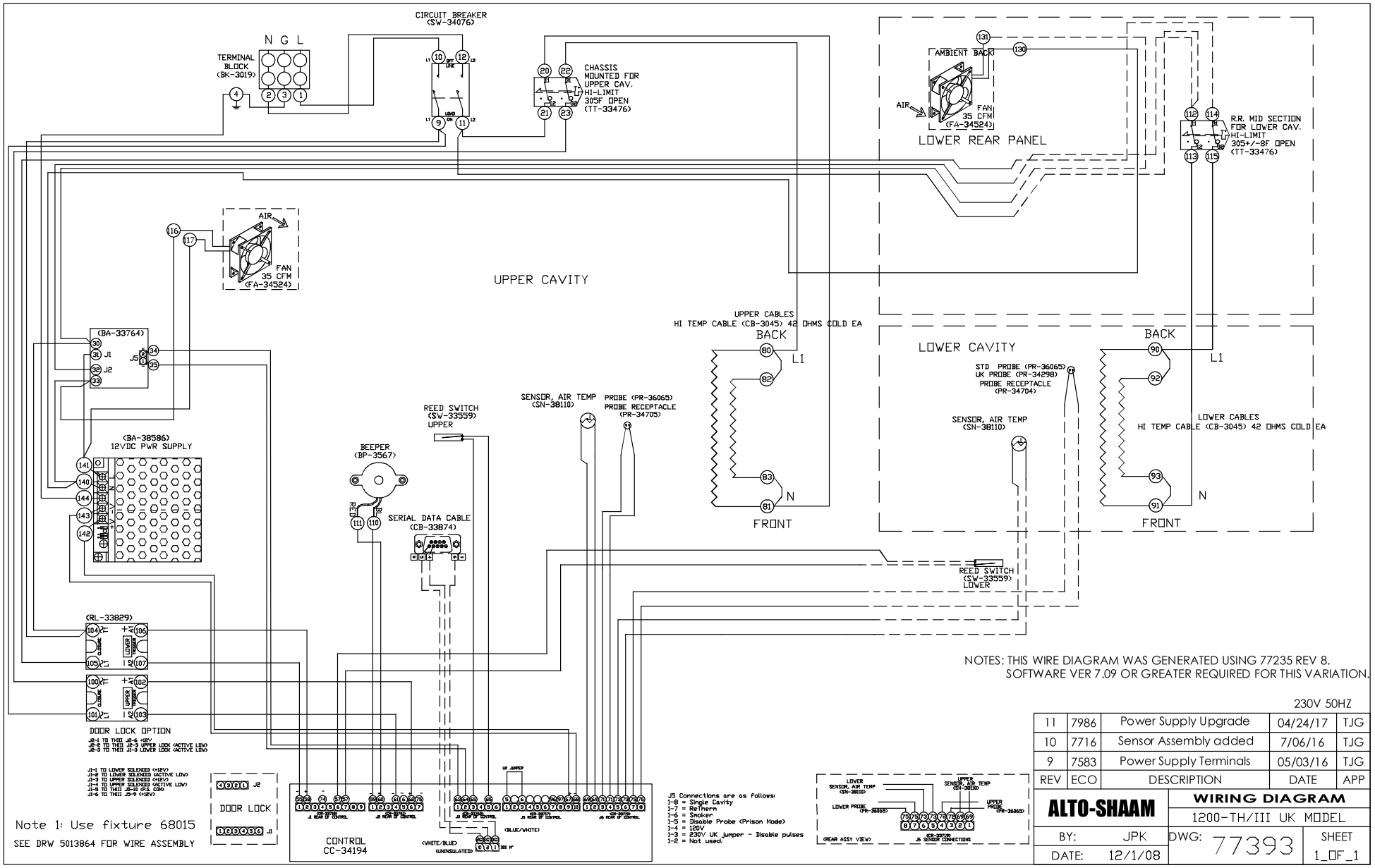


NOTES: THIS WIRE DIAGRAM WAS GENERATED USING 77235 REV 8.
SOFTWARE VER 7.09 OR GREATER REQUIRED FOR THIS VARIATION.

230V 50HZ

| REV | ECO | DESCRIPTION | DATE | APP |
|---|---|---|---|---|
| 11 | 7986 | Power Supply Upgrade | 04/24/17 | TJG |
| 10 | 7716 | Sensor Assembly added | 7/06/16 | TJG |
| 9 | 7583 | Power Supply Terminals | 05/03/16 | TJG |

**ALTO-SHAAM**

**WIRING DIAGRAM**

1200-TH/III UK MODEL

| BY: | JPK | DWG: | 77393 | SHEET |
|---|---|---|---|---|
| DATE: | 12/1/08 | | | 1_OF_1 |

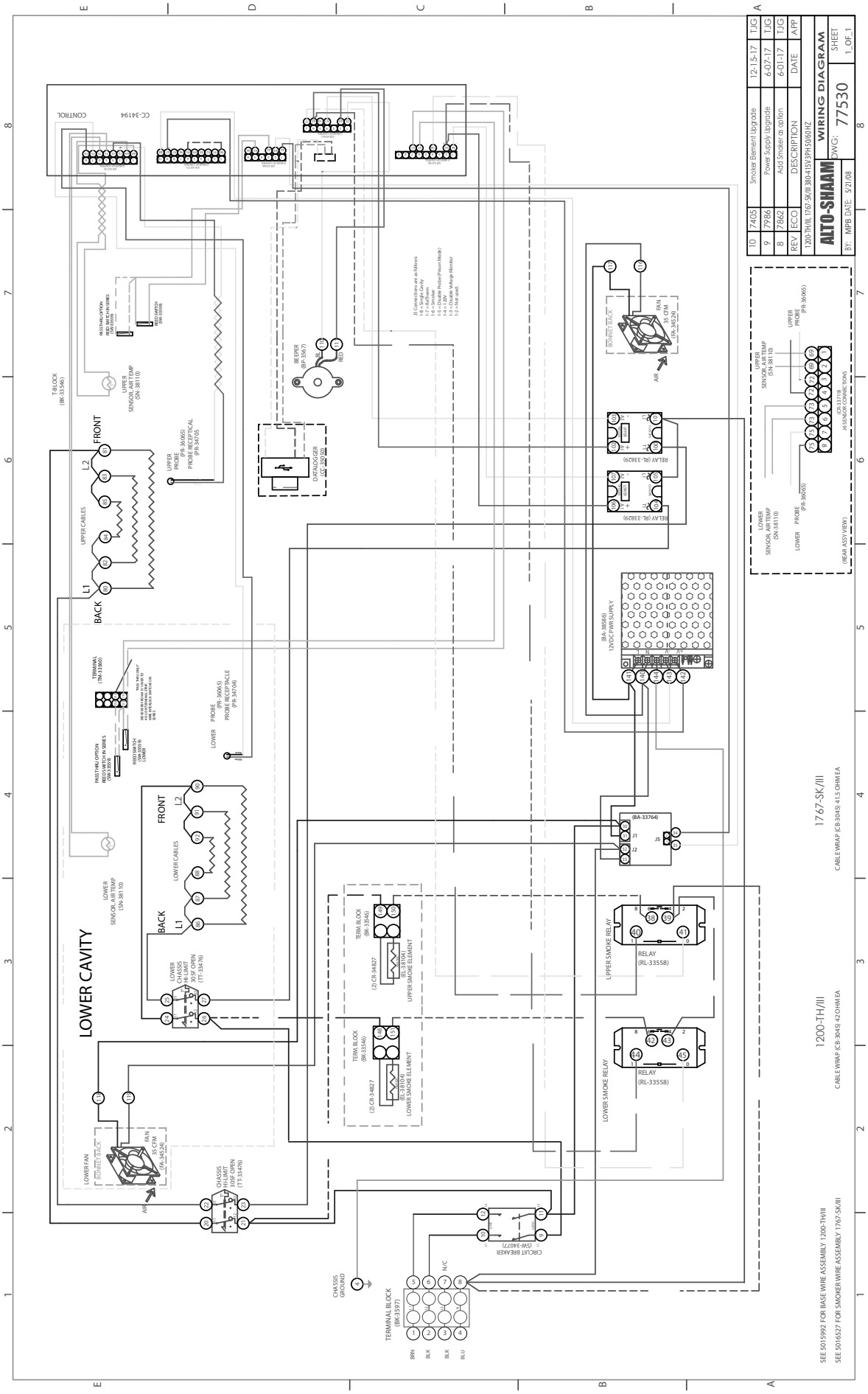
LOWER CAVITY
1767-SK/III
1200-TH/III
CABLE WRAP (CB-30451) 41.5 OHM EA
CABLE WRAP (CB-30451) 42 OHM EA
SEE 5015992 FOR BASE WIRE ASSEMBLY 1200-TH/III
SEE 5016527 FOR SMOKER WIRE ASSEMBLY 1767-SK/III
ALTO-SHAAM
WIRING DIAGRAM
DWG: 77530
SHEET 1_OF_1
1200-TH/III 1767-SK/III 380-415V 3PH 50/60HZ
10 7405 Smoker Element Upgrade 12-15-17 TJG
9 7986 Power Supply Upgrade 6-07-17 TJG
8 7862 Add Smoker as option 6-01-17 TJG
REV ECO DESCRIPTION DATE APP
BY: MPB DATE: 5/21/08
CONTROL
CC-34194
T-BLOCK (BK-33546)
UPPER SENSOR, AIR TEMP (SN-38110)
UPPER PROBE (PR-36065) PROBE RECEPTACLE (PR-34705)
UPPER CABLES
FRONT
BACK
L1
L2
BEEPER (BP-3567)
DATALOGGER (AC-35050)
JS Connections are as follows
1-3 = Rotisserie Only
1-4 = Rotisserie
1-6 = Smoker
1-5 = Cook & Hold Probe (Poison Mode)
1-4 = 120V
1-3 = Cook & Hold Voltage Monitor
1-2 = Hot Lock
BONNET TRACK
FAN 35 CFM (FA-34524)
AIR
RELAY (RL-33829)
(BA-38586) 12VDC PWR SUPPLY
(BA-33764)
TERMINAL (TM-33560)
PASS THRU OPTION REED SWITCH IN SERIES (SW-34077)
REED SWITCH DOOR SENSOR LOWER
PROBE (PR-36065) PROBE RECEPTACLE (PR-34706)
LOWER
LOWER SENSOR, AIR TEMP (SN-38110)
LOWER CABLES
LOWER CHASSIS HI-LIMIT 300F OPEN (TT-33476)
TERM BLOCK (BK-33546)
(2) CR-34827
(EL-38104) UPPER SMOKE ELEMENT
(EL-38104) LOWER SMOKE ELEMENT
UPPER SMOKE RELAY
LOWER SMOKE RELAY
RELAY (RL-33558)
LOWER FAN
CHASSIS HI-LIMIT 300F OPEN (TT-33476)
CIRCUIT BREAKER (SW-34077)
CHASSIS GROUND
TERMINAL BLOCK (BK-3597)
N/C
BRN
BLK
BLK
BLU
UPPER PROBE (PR-36065)
UPPER SENSOR, AIR TEMP (SN-38110)
(CB-33719) J45 HEATER CONNECTIONS
LOWER PROBE (PR-36065)
LOWER SENSOR, AIR TEMP (SN-38110)
(REAR ASSY VIEW)

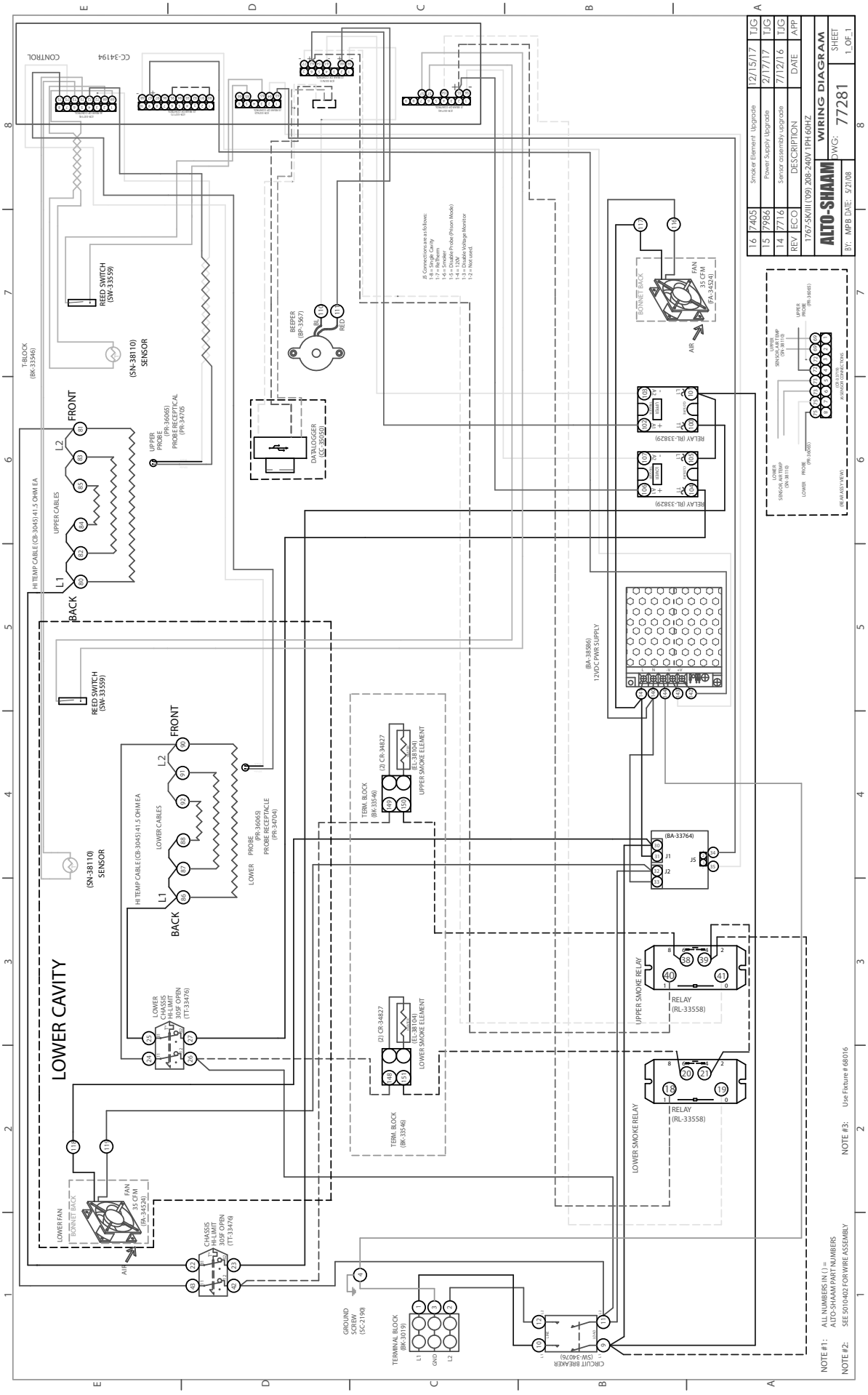

LOWER CAVITY
BACK
FRONT
L1
L2
UPPER CABLES
LOWER CABLES
HI TEMP CABLE (CB-3045) 41.5 OHM EA
REED SWITCH (SW-33559)
(SN-38110) SENSOR
T-BLOCK (BK-33546)
UPPER PROBE (PR-36065) PROBE RECEPTICAL (PR-34705)
LOWER PROBE (PR-36065) PROBE RECEPTACLE (PR-34704)
BEEPER (BP-3567)
DATALOGGER (CC-35050)
CONTROL
CC-34194
BONNET BACK
FAN 35 CFM (FA-34524)
AIR
RELAY (RL-33829)
(BA-38586) 12VDC PWR SUPPLY
(BA-33764)
J1
J2
J5
TERM. BLOCK (BK-33546)
(2) CR-34827
(EL-38104) UPPER SMOKE ELEMENT
(EL-38104) LOWER SMOKE ELEMENT
UPPER SMOKE RELAY
LOWER SMOKE RELAY
RELAY (RL-33558)
LOWER CHASSIS HI-LIMIT 305F OPEN (TT-33476)
CHASSIS HI-LIMIT 305F OPEN (TT-33476)
LOWER FAN
GROUND SCREW (SC-2190)
TERMINAL BLOCK (BK-3019)
CIRCUIT BREAKER (SW-34076)
J5 Connections are as follows:
1-8 = Single Cavity
1-7 = Rethem
1-6 = Smoker
1-5 = Double Probe (Pilson Mode)
1-4 = 120V
1-3 = Double Voltage Monitor
1-2 = Not used.
16 7405 Smoker Element Upgrade 12/15/17 TJG
15 7986 Power Supply Upgrade 2/17/17 TJG
14 7716 Sensor assembly upgrade 7/12/16 TJG
REV ECO DESCRIPTION DATE APP
1767-SK/III (09) 208-240V 1PH 60HZ
ALTO-SHAAM
WIRING DIAGRAM
DWG: 77281
SHEET 1_OF_1
BY: MPB DATE: 5/21/08
NOTE #1: ALL NUMBERS IN ( ) = ALTO-SHAAM PART NUMBERS
NOTE #2: SEE 5010402 FOR WIRE ASSEMBLY
NOTE #3: Use Fixture # 68016

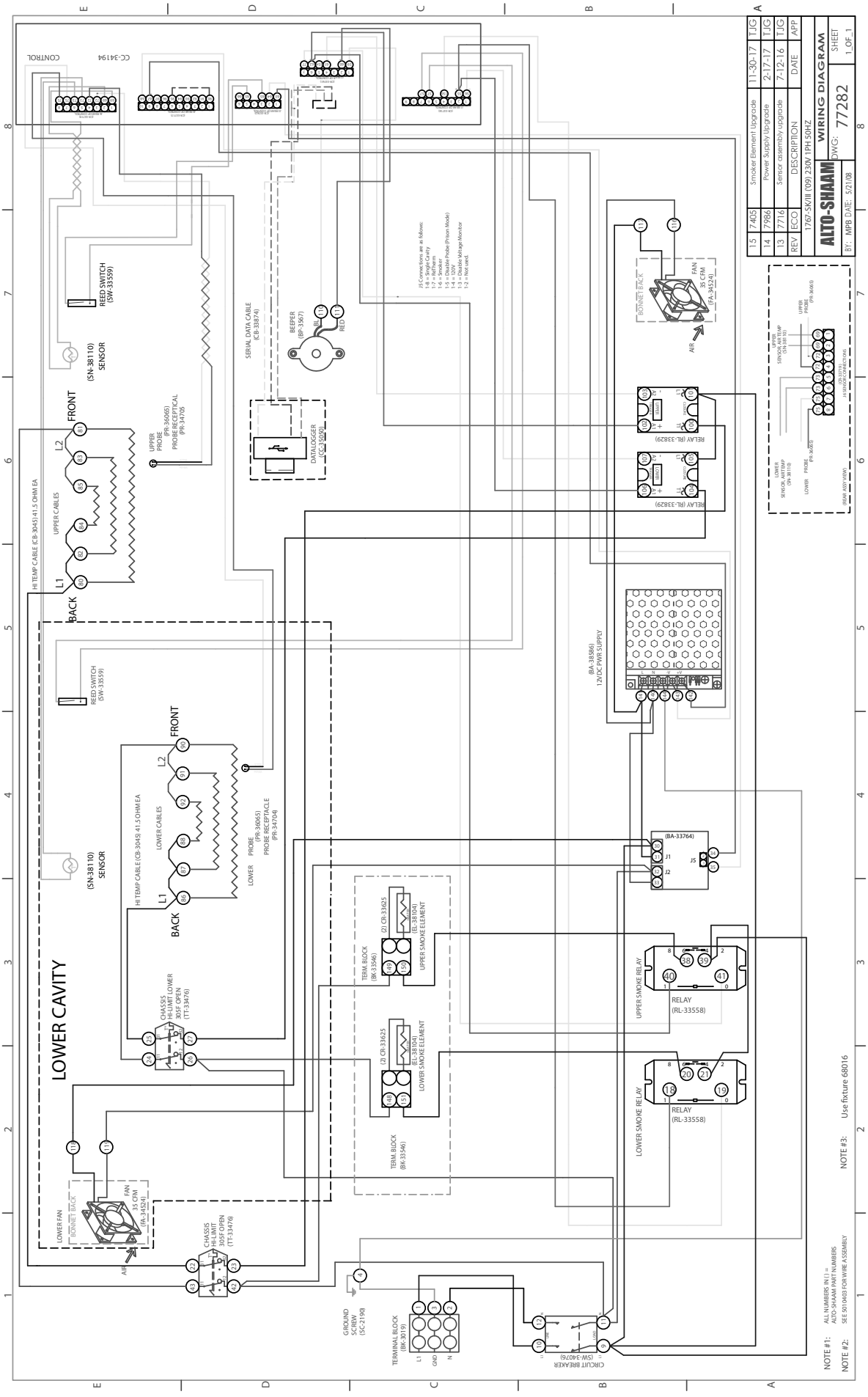
LOWER CAVITY
WIRING DIAGRAM
ALTO-SHAAM
DWG: 77282
SHEET 1_OF_1
1767-SKIII (09) 230V 1PH 50HZ
DESCRIPTION
Smoker Element Upgrade
Power Supply Upgrade
Sensor assembly upgrade
NOTE #1: ALL NUMBERS IN ( ) = ALTO-SHAAM PART NUMBERS
NOTE #2: SEE 9010403 FOR WIRE ASSEMBLY
NOTE #3: Use fixture 68016

# Limited Warranty

Alto-Shaam, Inc. warrants to the original purchaser only that any original part that is found to be defective in material or workmanship will, at Alto-Shaam's option, subject to provisions hereinafter stated, be replaced with a new or rebuilt part.

## The original parts warranty period is as follows:

For the refrigeration compressor on Alto-Shaam Quickchillers™, five (5) years from the date of installation of appliance.

For the heating element on Halo Heat® cooking and holding ovens, as long as the original purchaser owns the oven. This excludes holding only equipment.

For all other original parts, one (1) year from the date of installation of appliance or fifteen (15) months from the shipping date, whichever occurs first.

The labor warranty period is one (1) year from the date of installation or fifteen (15) months from the shipping date, whichever occurs first.

Alto-Shaam will bear normal labor charges performed during standard business hours, excluding overtime, holiday rates or any additional fees.

To be valid, a warranty claim must be asserted during the applicable warranty period. This warranty is not transferable.

## This warranty does not apply to:

1. Calibration.
2. Replacement of light bulbs, door gaskets, and/or the replacement of glass due to damage of any kind.
3. Equipment damage caused by accident, shipping, improper installation or alteration.
4. Equipment used under conditions of abuse, misuse, carelessness or abnormal conditions, including but not limited to, equipment subjected to harsh or inappropriate chemicals, including but not limited to, compounds containing chloride or quaternary salts, poor water quality, or equipment with missing or altered serial numbers.
5. Damage incurred as a direct result of poor water quality, inadequate maintenance of steam generators and/or surfaces affected by water quality. Water quality and required maintenance of steam generating equipment is the responsibility of the owner/operator.
6. Damage caused by use of any cleaning agent other than Alto-Shaam's Combitherm® Cleaner, including but not limited to damage due to chlorine or other harmful chemicals. **Use of Alto-Shaam's Combitherm® Cleaner on Combitherm® ovens is highly recommended.**
7. Any losses or damage resulting from malfunction, including loss of product, food product, revenue, or consequential or incidental damages of any kind.
8. Equipment modified in any manner from original model, substitution of parts other than factory authorized parts, removal of any parts including legs, or addition of any parts.

This warranty is exclusive and is in lieu of all other warranties, express or implied, including the implied warranties of merchantability and fitness for a particular purpose. In no event shall Alto-Shaam be liable for loss of use, loss of revenue or profit, or loss of product, or for any indirect, special, incidental, or consequential damages. No person except an officer of Alto-Shaam, Inc. is authorized to modify this warranty or to incur on behalf of Alto-Shaam any other obligation or liability in connection with Alto-Shaam equipment.

Effective November 1, 2012

W164 N9221 Water Street • P.O. Box 450
Menomonee Falls, Wisconsin 53052-0450 U.S.A.

PHONE: 262.251.3800 • 800.558.8744 U.S.A. / CANADA
FAX: 262.251.7067 • 800.329.8744 U.S.A. ONLY
www.alto-shaam.com

Printed in the U.S.A